we think transport

BPW OPERATOR'S MANUAL

- ECO Plus 3 Axles
- ECO Plus Axles
- ECO Axles
- Conventional Axles
- TS2, TSB and SB Style Disc Brakes
- Airbag Suspensions
- Turntables
- BPW Multivolt Trailer EBS
- BPW Weight Watcher
- BPW Landing Legs
- BPW Special Tools
- BPW Alloy Hubs

Valid for operational use in

AUSTRALIA

WARRANTY DOCUMENTS / SERVICE AND MAINTENANCE INSTRUCTIONS

TRANSPEC
ENGINEERED TO LAST

Contents **Page**

• First Service		2
• First Service Check Sheet		3
• Warranty Statement		4
• Airbag Suspensions	- Service and Maintenance Overview	8
• Drum Brake Axles	- Service and Maintenance Overview	10
• Disc Brake Axles	- Service and Maintenance Overview	12
• Axles	- Lubrication	14
	- ECO Plus Hub Unit + ECO Plus 3 Hub Unit	16
	- ECO Hub Unit	18
	- Wheel Studs	20
• Brakes	- Drum Brakes	23
	- Disc Brakes - TS2 Style (BPW ECO Disc TS2)	28
	- Disc Brakes - TSB Style (BPW ECO Disc)	38
	- Disc Brakes - SB Style (Knorr Bremse)	46
• Air Suspensions	- Maintenance	54
	- Axle Lifts	59
• Raise and Lower System		64
• Self Steering Axles		66
• Automatic Slack Adjusters	- ECO-Master	68
• Digital Hubodometers	- ECOMETER	72
• Turntables (Ball Races)		75
• Conventional Hub Unit	- Service and Maintenance Overview	76
• Hub Unit Identification		80
• BPW Multivolt Trailer EBS		82
• BPW Weight Watcher System		90
• BPW Landing Legs		92
• BPW Special Tools		100
• BPW Alloy Hubs Service Procedures		113
• Disc Brake Caliper Type Identification SB / TSB		115

First Service

In order to qualify for the one year warranty for the BPW Axle and/or Air Suspension, and for the extended three year guarantee for the ECO Plus Hub Unit and ECO Plus 3 Hub Unit, the vehicle must undergo a specific First Service at an approved BPW service provider.*

This First Service is to be performed between the first 1,000km to 5,000km that the vehicle is in operation.

At this First Service the work as described on the next page must be performed and the accompanying form (BPW First Service Checklist) must be filled out completely and returned to the address below. Once this process is complete the vehicle is registered for the relevant warranty.

BPW Transpec Pty Ltd
1 - 11 Cherry Lane
Laverton North
Victoria 3026

Postal
PO Box 217
Laverton Victoria
Australia 3028

Phone (03) 9267 2444
Fax (03) 9369 4826
Email info@bpwtranspec.com.au

* Please see pages 4-7 for complete details of warranty requirements and conditions.

BPW First Service Check Sheet

BPW Axle and/or Airbag Suspension First Service Checklist and ECO Plus and ECO Plus 3 Hub Unit Extended Warranty Application*

Trailer **VIN Number -** _____ NB- ECO Plus Hub Unit extended guarantee is not accepted without valid VIN Number. *	**First Service** **Authorisation Number -** _____

First Service to be performed between the first 1,000km to 5,000km that the vehicle is in operation. Please return completed checklist to BPW Transpec Pty Ltd for warranty registration.

	Service Requirement	Tick	Comments
BPW Airbag Suspensions	Check operation of airbag pneumatic system and that it is piped correctly. Also check height control valve linkage arrangement.		
	Check ride height on axle fitted with height control valve. Re-set if necessary to manufacturer's recommendation. Ensure trailer air supply is connected and brakes are released.		
	Retighten spring eye bolts to specific torques - **M24 (SW36) = 650 Nm (480 ft/lbs)** **M30 (SW46) = 1000 Nm (740 ft/lbs)**		
	Retighten U-bolt nuts to specific torque - **M24 = 650 Nm (480 ft/lbs)**		
	Retighten shock absorber fasteners to specified torque - **M24 = 425 Nm (315 ft/lbs)** (alloy hangers) **M24 = 325 Nm (240 ft/lbs)**		
	Retighten airbag fasteners to specified torque - **M12 = 66 Nm (49 ft/lbs)** **M16 = 230 Nm (170 ft/lbs)**		
	Check alignment plates are welded to seats (if fitted).		
	Check for air leaks and rectify if necessary		
BPW Axles	Remove hubcap and re-adjust bearings to the required specifications as shown on pages 26 and 27 of the Operator's Manual.		
	Check brake adjustment. Adjust if necessary,		
	Visually check for loose fasteners. Retighten if necessary.		
	With disc brake axles: Check that the brake caliper brake adjuster cap is in place. Fit new cap of required.		
	With disc and drum brakes axles: Check that the lower plastic vent plugs have been removed from the BPW brake boosters. Remove vent plug if necessary.		

Date :	Trailer Manufacturer :	Trailer Owner :
Trailer Registration Number :	Kilometers Travelled :	Order / Job Card No :
BPW Suspension Serial No :	Trailer In - service Date :	First Service Performed by :

Trailer Type :						Axle Serial Numbers :
Pig Trailer	☐	Curtain Sider	☐	Tanker	☐	Number of Axles
Dog Trailer	☐	Van	☐	Low Loader	☐	_____
Semi Trailer	☐	Tipper	☐	Other	☐	

Warranty Statement

BPW Transpec offers a diverse and industry competitive range of warranty options on its products.

Provided the vehicle receives the **BPW Transpec Complimentary First Service** and that the vehicle is maintained in accordance with the maintenance schedule as published in the **BPW Operator's Manual** — the warranty periods on the products indicated below will be either 3 years or 1,000,000 km from date of first registration or 2 years or 500 000km from date of first registration — whichever expires first. Products not indicated below are still subject to a 1 year unlimited kilometre warranty from date of first registration. All components on vehicles which do not receive the **BPW Transpec Complimentary First Service** are subject to the standard 1 year unlimited kilometre warranty—valid from date of first registration.

3 Years*	or…km -whichever expires first
ECO Plus 3 including	1,000,000
Wheel Bearings	1,000,000
Hub Unit	1,000,000
Seals	1,000,000
Axle Nut Assembly	1,000,000
Suspension Spring Pads	1,000,000
Axle Beam	1,000,000
Hangers**	1,000,000
2 Years*	or…km -whichever expires first
Brake Caliper	500,000
Brake Disc	500,000
Slack Adjusters***	500,000
S-Cam Shafts	500,000
S-Cam Bearings	500,000
Air Bags	500,000
Shock Absorbers	500,000
Pivot Bushes	500,000
Trailing Arms (Springs)	500,000
Hub	500,000
Drum	500,000

* Subject to completion of Complimentary First Service and First Service Registration.

** Subject to correct installation as per BPW Installation recommendations - copy available on request.

*** 1 Year warranty (unlimited kilometres) for operation in metropolitan traffic.

**** Damage to parts must be fully documented via Photographs and completed Warranty Claim Form.

**** Damaged parts may be required to be returned to BPW Transpec for inspection.

1. Warranty Statement

Subject to the vehicle undergoing a first service at an approved service provider between the first 1,000km to 5,000km of service, and subject to the appropriate paperwork being submitted to BPW Transpec Pty Ltd (hereafter referred to as BPW) upon completion of the first service, BPW will for the duration of the warranty period cover the axle and suspension system for faulty workmanship and/or material within the BPW scope of supply, as described below;

- For a warranty period of twelve months without any limit on distance travelled for BPW Axles and Suspensions fitted to full trailers and semi-trailers as from the day of first vehicle registration or entry into service (whichever is sooner).
- For the specific items indicated on page 6 the warranty will be extended as indicated from the day of first vehicle registration or entry into service (whichever is sooner) for the periods as noted.
- In the case of air suspension systems, only for trailers equipped with a transverse throttle between the airbags on the left and right hand sides, starting from the day of first registration or on which the vehicle entered service.
- Only for trailers registered for and used on public roads at or below legally permitted axle loads and within the manufacturer's capacity rating.
- For operation in Australia.
- Only for vehicles travelling on highway or sealed roads.
- Only for running gear installed as per BPW installation instructions.

2. Scope of Warranty

For the duration of the warranty period BPW will cover the costs for material that is to be replaced as well as for disassembly and installation in line with BPW standard time guidelines. Such work must be agreed in advance with BPW or the relevant BPW representative and performed by an authorized service centre. Defective or damaged parts that have been disassembled must be kept in storage and, where applicable and subject to agreement, returned to BPW at the owner's expense.

Any and all further claims are excluded. Failures that fall within the terms of the BPW warranty must be notified immediatel y on discovery to BPW or the appropriate authorised BPW representative/dealer or service centre. This warranty is given subject to original ownership of the goods being maintained.

3. Exclusion from the Warranty

This warranty does not cover normal wear and tear, the relevant wearing parts (in particular brake linings, brake drums, brake discs, brake pads), maintenance-dependent parts within disc brake calipers, or environmental intrusion resulting from noise and odour emission. This warranty also does not apply in the case of damage due to external forces, operating errors, and/or non-compliance with BPW's service and maintenance requirements. The use of any non-genuine parts during the warranty period will also render the BPW warranty void.

Cases where the running gear specification is not suitable for the operating conditions may also be excluded from warranty.

Damage caused by water ingress due to fording, e.g. rivers, streams and/or floodwaters, is excluded from this warranty.

4. Registration

This warranty will only be given for trailers that have been registered and that have had the first service performed between the first 1,000km to 5,000km in service. Registration of each trailer is undertaken by way of having the first service performed at an approved BPW service provider and submitting to BPW the relevant First Service / Warranty Registration document.

5. Conditions for obtaining and maintaining the ECO Plus Hub Unit warranty

Obtaining and maintaining the ECO Plus Hub Unit warranty, is subject to compliance with all measures prescribed in the current version of the BPW Operator's Manual. This booklet contains the current service instructions, which are subject to change, refer item 8 below.

6. Repairs during the warranty period

When repairs are carried out during the warranty period the warranty covering the replaced component will continue as previously and will not start anew.

7. Definition of highway (on-road) / off-road:

The term “highway” (on-road) refers to roads having a sealed and metalled surface, in other words with an asphalt or concrete surface. If the vehicle spends the overwhelming majority of its operating life travelling on such roads, and will travel on unmade roads incidentally for small distances and predominantly at low speeds, then for the purpose of this warranty statement the vehicle is considered to be operating in “highway” conditions.

The term “off-road” refers to vehicles that do not meet the “highway” criteria, i.e. they will travel for some of their operating life on unsealed roads at high speeds.

If in doubt, operators should obtain clarification from BPW regarding the classification, and therefore the warranty coverage, for their operating conditions.

8. Further development of BPW products, alterations to maintenance requirements

Because BPW is continuously developing and improving its products, the prescribed maintenance and service instructions may change from time to time. We apologise for any inconvenience this may cause. The latest information available can be accessed at www.bpwtranspec.com.au at any time. Upon request you will be sent - free of charge - the latest edition of the warranty conditions including service and maintenance instructions. The requirements for obtaining and maintaining the BPW warranty and, where applicable, the extended warranty for the ECO Plus Hub Unit and ECO Plus 3 Hub Unit, must in all cases be carried out in accordance with BPW’s latest service instructions.

9. BPW Transpec Pty Ltd General Warranty Conditions

BPW Transpec Pty Ltd (“the Company”) warrants that all goods supplied by the Company during the term of this warranty (the “Goods”) (unless already covered by any other manufacturers warranty) shall be free from defects in materials and workmanship for a period of 12 months from the date of delivery to the customer. The Company agrees pursuant to this Warranty to repair or, at its option, to replace, free of charge, any of the Goods which it accepts as defective.

Claims hereunder can only be accepted if lodged by the customer at an authorised service centre of the Company. Details of authorised service centres can be obtained from your nearest BPW Transpec Pty Ltd office. Claims must be made in the form of a written failure report accompanied by proof of purchase of the Goods. The Goods must be delivered to the Company with the written failure report at the expense of the customer and, where applicable, repaired or replacement goods will be shipped to the cus tomer at the Company’s expense. This Warranty is given subject to original ownership of the Goods being maintained and is valid only if the Company is satisfied upon examination of the alleged def ect that its recommendation for installation and maintenance has been followed and the Goods have been worked within normal operating limits. Defects occasioned by normal wear and tear will not be considered as within this Warranty. The Company shall in no circumstances be liable under the terms of this Warranty where Goods have been repaired, altered or overhauled without the Company’ s consent. Where any parts are returned under the terms of this Warranty a customer must not make any deduction on account thereof from remittances or current accounts while claims are in process of disposition.

The Company shall in no circumstances be liable under this Warranty in contract or tort (including negligence) for any consequential loss or damage of any nature arising through any defect in the Goods (subject to paragraph 4, where applicable).

If you have acquired our goods as a consumer within the meaning of the Australian Consumer Law, the following also applies: Our goods come with guarantees that cannot be excluded under the Australian Consumer Law. You are entitled to a replacement or refund for a major failure and for compensation for any other reasonably foreseeable loss or damage. You are also entitled to have the goods repaired or replaced if the goods fail to be of acceptable quality and the failure does not amount to a major failure. This Warranty does not purport to, and does not have the effect of, excluding, restricting or modifying the exercise of any right or remedy in respect of the Goods which the Customer has under the Austral ian Consumer Law or other relevant legislation which cannot be lawfully excluded, restricted or modified.

It is essential that all maintenance work is carried out in accordance with the prescribed intervals in order to maintain the safe operation and roadworthiness of the trailer. The relevant operation and service regulations of the vehicle manufacturer and of the manufacturers of other vehicle parts must also be adhered to.

Rectification of any defects which are discovered or replacement of worn parts should be carried out by a BPW Approved Service Provider.

We strongly recommend that only genuine BPW parts be used when fitting spare parts. Parts authorised by BPW for trailer axles and axle units are regularly subjected to special inspections. BPW accepts product liability for them.

BPW is unable to determine whether all third party products can be used with BPW trailer axles and axle units without any safety risk; this also applies even if an authorised testing organisation has accepted the product.

Our warranty will cease to apply if spare parts other than genuine BPW spare parts are employed in warranty covered work and repairs.

The warranty shall also be rendered null and void if the BPW axle systems are not installed in accordance with the technical guidelines given in the current BPW installation instructions.

Brake linings

Brake lining qualities authorised by BPW are matched to each other and their performance is confirmed in the assessment reports and the general certification of the components. These brake linings are subject to continual monitoring by the Quality Assurance Department, so that BPW is able to warrant consistent quality. BPW cannot verify the performance of the braking system should other types of lining be used. Our warranty is therefore void if other brake linings are used.

BPW Airbag Suspensions

Lubrication and maintenance work Overview

○ Lubricate

□ Maintenance work

T Tighten all bolted connections to the specified torque (1)

For detailed description see pages 54-63

	First service between 1000km and 5000km (1)	Every 12 weeks (Quarterly)	Every 26 weeks (Twice Annually)	Every Year (Annually) (3)
○ Grease stabiliser bearing bushes with grease and check for wear (if stabiliser bars fitted). (4)	○	○		
1 Check condition of air bags.			□	
2 Check air suspension piping for leaks and wear. Check levelling valve and linkage for condition. Check suspension ride height. (2)	□		□	
3 Check shock absorber fastenings. M24 **M = 425 Nm (315 ft/lbs)** M24 (Alloy Hanger) **M = 325 Nm (240 ft/lbs)**	T			□
4 Check U-bolts for firm seating. M24 **M = 650 Nm (480 ft/lbs)**	T			□
5 Check air bag fasteners for firm seating. M12 (upper mounting nuts) **M = 66 Nm (49 ft/lbs)** M16 (lower mounting screws) **M = 230 Nm (170 ft/lbs)**	T			□
6 Check spring eye bolts for firm seating. M24 (SW 36) **M = 650 Nm (480 ft/lbs)** M30 (SW 46) **M = 1000 Nm (740 ft/lbs)**	T			□
7 Check spring eye bolt to gusset plate connection (if fitted) (5) M18 **M = 1000 Nm (740 ft/lbs)**	T			□
8 Check axle lift device for firm seating (if axle lift fitted). M16 (cylinder) **M = 195 Nm (145 ft/lbs)** M16 (support arm) **M = 230 Nm (170 ft/lbs)**	T			□
9 Check hanger mounting bolts on frame (if fitted). (5) M16 **M = 260 Nm (195 ft/lbs)**	T			□
10 Catch Strap - check condition and fastening.			□	
- Check stabiliser fasteners (if stabiliser bars fitted).				□
- Visually check all components for damage and wear.		□		
- Drain air suspension tank		□		

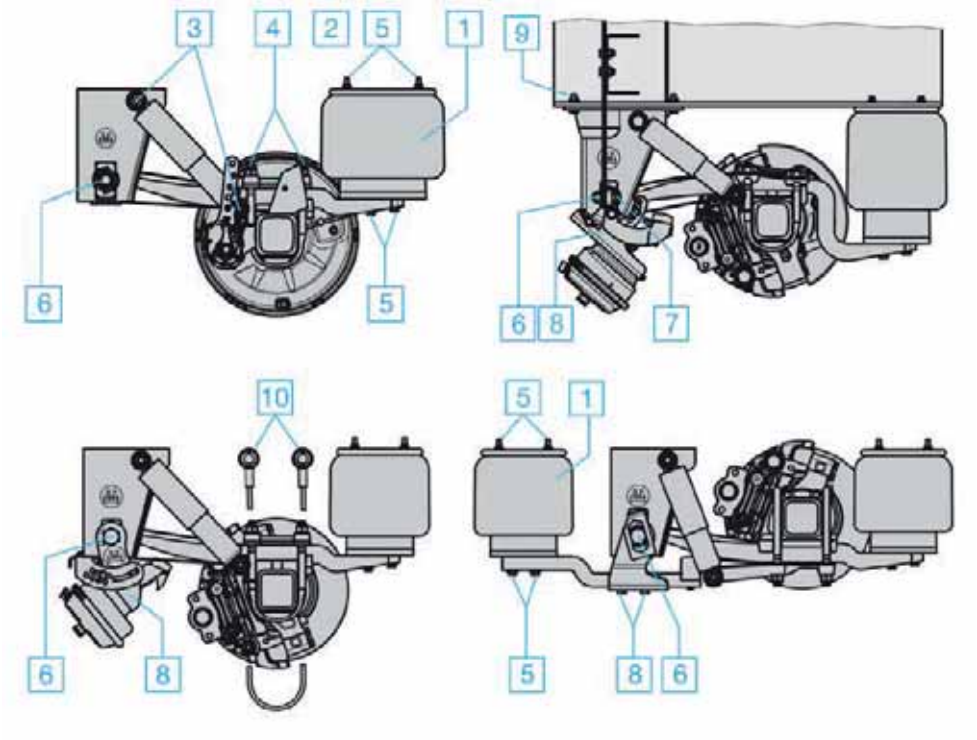

(1) The suspension fasteners must be re-torqued between the first 1,000km and 5,000km. For units operating under extreme conditions the suspension fasteners will bed in earlier and should be re-torqued after the first laden trip.
(2) For correct suspension ride height refer to the appropriate suspension specification.
(3) Under extreme conditions, service more frequently.
(4) Lubricate with BPW special longlife grease ECO-Li Plus
(5) Only with optional BPW bolt-on hanger and gussets.

<u>If re-assembling the suspension please note:</u>

- All threads and nut washer interfaces (where applicable) must be lubricated with anti -seize prior to assembly.
- The spring eye bolt and shock absorber fasteners are to be tightened when the suspension is set at the correct ride height.
- U-bolt tightening procedure: nip up all the U-bolt nuts, then tighten the nuts to the prescribed torque in several stages on alternate sides (i.e. one U-bolt at a time).

BPW Axles / Steering Axles

Lubrication and maintenance work Overview

For detailed description see pages 14-19

◯ Lubricate

☐ Maintenance work

	First service between 1000km and 5000km	Every 4 weeks (Monthly)	Every 12 weeks (Quarterly)	Every 26 weeks (Twice Annually)	Every 1 to 3 years or every 250,000 to 500,000km (1)	Every 3 years or 1 million km ECO Plus Hub Unit + ECO Plus 3 (2)
Lubrication Work - Drum Brakes						
1 Steering knuckle bearing, top and bottom.		1				
2 Low-maintenance camshaft bearing: (4)						
Long distance haulage.			2			
Short distance haulage .		2				
3 BPW slack adjuster:						
Long distance haulage.			3			
Short distance haulage.		3				
4 BPW **ECO Plus 3** Hub Unit (extended warranty) (2)						4
BPW **ECO Plus** Hub Unit (extended warranty) (2)						
BPW **ECO Plus** Hub Unit .					4	
BPW **ECO** Hub Unit .					4	
1 **Maintenance Work - Drum Brakes** Check wheel nuts for tightness. (3)	☐					
☐ Check hubcaps for tightness.				☐		
2 Check brake lining thickness at least 5mm.			☐			
3 Check brake drum for cracks and check internal diameter.			☐			
4 Check operation of manual slack adjusters. Adjust if necessary to 10% to 12% of the con-nected brake length.		☐				
4 Check operation of automatic slack adjusters.			☐			
☐ Visual inspection of all component parts for wear or damage.			☐			
5 Remove hubcap and re-adjust bearings to the re-quired specifications as shown on pages 26 and 27 of the Operator's Manual.	☐			☐		

Lubricate with BPW special longlife grease ECO-Li Plus

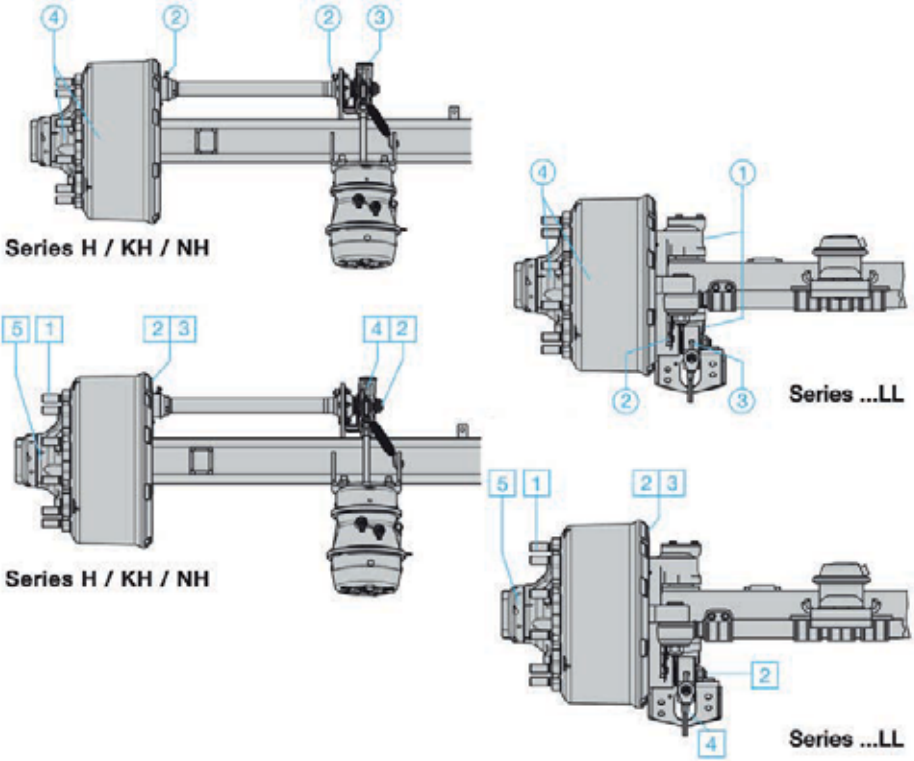

(1) Under extreme conditions, lubricate more frequently (e.g. off-road, poor roads, construction sites, impeded braking effort, water ingress caused by fording). With 19.5 inch and 17.5 inch Hubs we recommend a grease replacement at 500,000km due to the faster rotation of the hubs.

(2) For complete details of ECO Plus Hub Unit and ECO Plus 3 Hub Unit extended warranty please see pages 4-7.

(3) After the first run under laden conditions, likewise after each wheel change.

(4) After a long idle period, prior to initial operation actuate the brake lever and lubricate the brake cam-shaft bearing.

For the positions (1) to (3) the use of a high pressure central lubrication system which is capable of feeding special longlife grease of viscosity class 2-3 is permitted. The use of liquid lubricants is not permitted!

BPW Axles / Steering Axles

Maintenance Work Overview

For detailed description of Hub Maintenance see pages 14-19

For TS2 Type Disc Brakes see pages 28-37
For TSB Type Disc Brakes see pages 38-45
For SB Type Disc Brakes see pages 46-53

◯ Lubricate

☐ Maintenance work

	First service between 1000km and 5000km	Every 4 weeks (Monthly)	Every 12 weeks (Quarterly)	Every 26 weeks (Twice Annually)	Every 1 to 3 years or every 250,000 to 500,000km (1)	Every 3 years or 1 million km ECO Plus Hub Unit + ECO Plus 3 (2)
Lubrication Work - Disc Brakes						
(1) Steering knuckle bearing, top and bottom.		(1)				
(4) BPW **ECO Plus 3** Hub Unit (extended warranty) (2)						(4)
BPW **ECO Plus** Hub Unit (extended warranty) (2)						
BPW **ECO Plus** Hub Unit .					(4)	
BPW **ECO** Hub Unit .					(4)	
Maintenance Work - Disc Brakes						
[1] Check wheel nuts for tightness (3) .	☐					
☐ Check hubcaps for tightness				☐		
[2] Check brake pad thickness			☐			
[3] Check the condition of the brake disc			[(4)]	☐		
[4] Check play and check adjustment (SB type brake)			[(4)]	☐		
[4] Check play and check adjustment (TSB type brake)			[(4)]	☐		
[5] Check the caliper guide system (SB type brake)			[(4)]	☐		
[5] Check the caliper guide system (TSB type brake)			[(4)]	☐		
[6] Remove hubcap and re-adjust bearings to the required specifications as shown on pages 26 and 27 of the Operator's Manual.				☐		
[7] Check bellows on the thrust tappets (SB type brake) Check coarse dirt seals (TSB type brake)				☐		
[8] Check caliper unit (SB type brake only)				☐		
☐ Visual inspection of all parts for wear or damage				☐		

Lubricate with BPW special longlife grease ECO-Li Plus

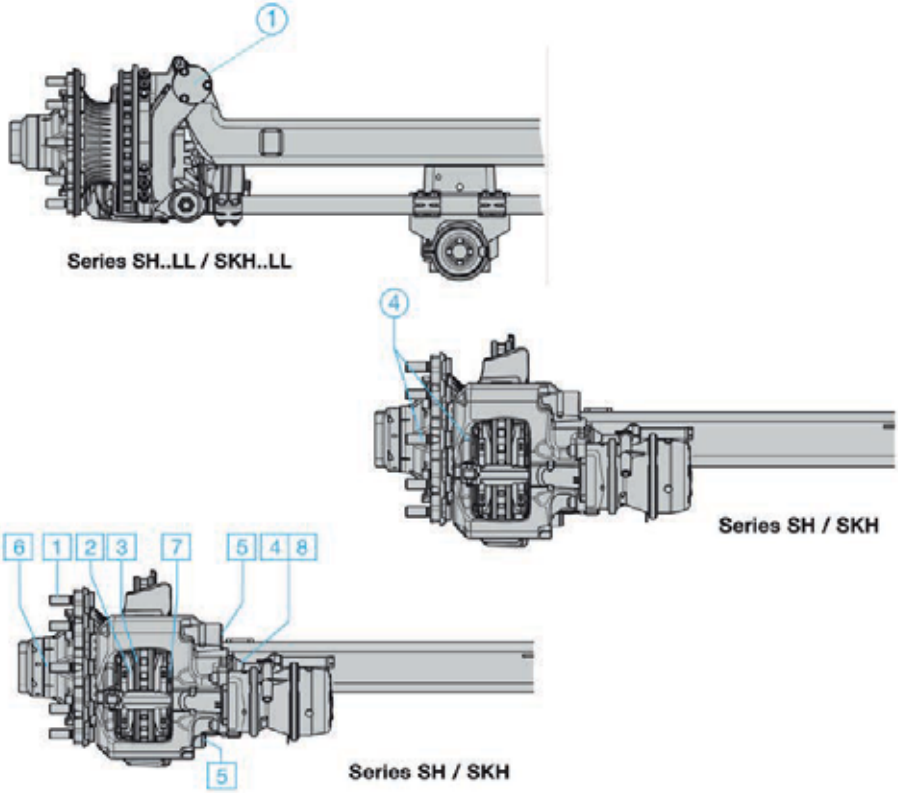

(1) Under extreme conditions, lubricate more frequently (e.g. off-road, poor roads, construction sites, impeded braking effort, water ingress caused by fording). With 19.5 inch and 17.5 inch Hubs we recommend a grease replacement at 500,000km due to the faster rotation of the hubs.
(2) For complete details of ECO Plus Hub Unit and ECO Plus 3 Hub Unit extended warranty please see pages 4-7.
(3) After the first run under laden conditions, likewise after each wheel change.
(4) 12 week interval recommended for harsh conditions (off-road, poor roads and heavy braking)

For the position (1) the use of a high pressure central lubrication system which is capable of feeding special long-life grease of viscosity class 2-3 is permitted. The use of liquid lubricants is not permitted!

Lubrication Requirements

Note: After cleaning the vehicle with high - pressure cleaners, all lubrication points must be relubricated.

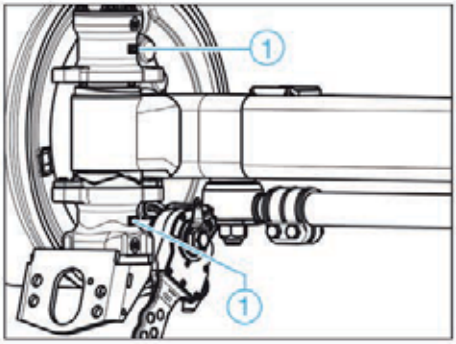

1 Steering knuckle bearing, top and bottom

- every 4 weeks.

Grease lubrication nipple with BPW special longlife grease **ECO-Li** Plus until fresh grease emerges from the bearing points.

Ensure that all grease nipple caps are replaced.

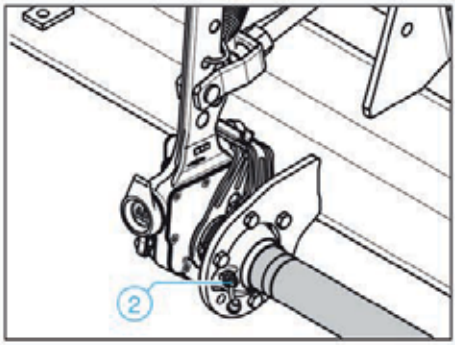

2 Low-maintenance brake camshaft bearing

- every 4 weeks (monthly) with short distance haulage.
- every 12 weeks (quarterly) with long distance haulage.

Grease lubrication nipple with BPW special longlife grease **ECO-Li** Plus until fresh grease emerges from the bearing points.

Ensure that all grease nipple caps are replaced.

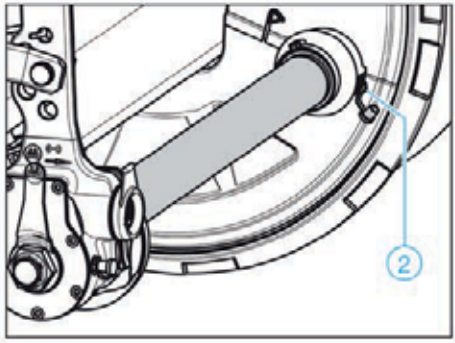

③ Automatic slack adjusters - ECO Master

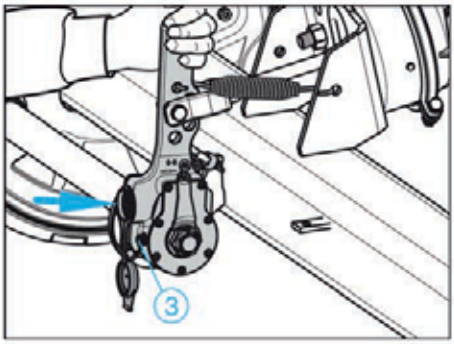

- every 4 weeks (monthly) with short distance haulage.
- every 12 weeks (quarterly) with long distance haulage.

ECO Master

Remove rubber seal cap. Grease with BPW special longlife grease **ECO-Li** Plus (approx. 80g) until sufficient new grease emerges from the adjustment screw.

Turn back adjustment screw (keep clutch sleeve pressed down) by approximately one turn using a ring spanner. Actuate the brake lever several times by hand. The adjustment must be carried out smoothly. If necessary, repeat several times.

Once again only use BPW special longlife grease **ECO-Li** Plus. Replace seal caps.

③ Manual slack adjuster

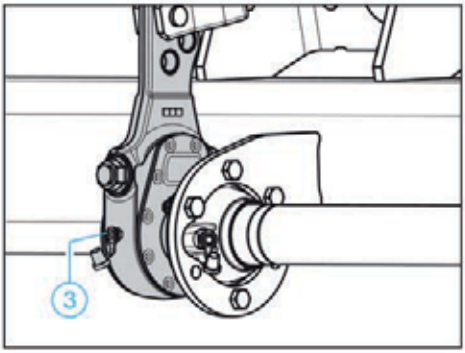

- every 4 weeks (monthly) with short distance haulage.
- every 12 weeks (quarterly) with long distance haulage.

Grease lubrication nipple with BPW special longlife grease **ECO-Li** Plus until fresh grease emerges.

Ensure that all grease nipple caps are replaced.

④ ECO Plus Hub Unit and ECO Plus 3 Hub Unit

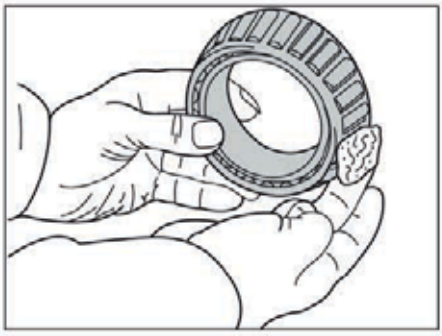

- every 1 to 3 years or 250,000 km to 500,000 km depending on conditions.
- or, every 3 years or 1 million kilometres if vehicle qualifies for ECO Plus Hub Unit and ECO Plus 3 Hub Unit extended warranty. Refer pages 4-7 for conditions.

Clean taper roller bearings and seals thoroughly, dry and check for reuseability. Replace oil seal if necessary. It is recommended that the taper roller bearings are thoroughly inspected and replaced if necessary.

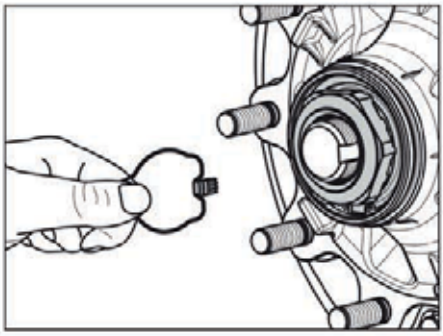

Work BPW special longlife grease **ECO-Li** Plus thoroughly into the cavities between the taper rollers and the cage in both taper roller bearings. (For grease quantity see illustration on page 17). Smear any residual grease into the hub's outer bearing race. Smear the lip of the seal all round with BPW special longlife grease **ECO-Li** Plus.

Clean the journals of the axle stub (metal must be bright, dry and free from grease). Spray journals with **BPW ECO Assembly and Protection Spray (A&P Spray)**. Allow to dry for about ten minutes until the film changes to a marked matte colour.

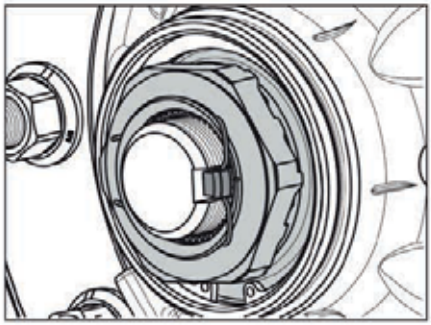

Fit the BPW ECO Plus Hub Unit and ECO Plus 3 Hub Unit, tighten axle nut whilst at the same time turning the ECO Plus Hub Unit, until the axle nut torque limiter operates.

Important!
Do not use an impact driver or rattle gun to tighten axle nut.

Do not back off the axle nut.

Fit the retaining key in the groove between the axle stub and the axle nut.

Clip retaining ring into groove around out-side of axle nut.

Fit hubcap.

ECO Plus Hub Unit and ECO Plus 3 Hub Unit

Please note: with the **ECO Plus 3** hub there is an o-ring (3) fitted underneath the hubcap that must be replaced every time that the hubcap is removed. The **ECO Plus 3** hubcap is only torqued to **350Nm**.

ECO Plus

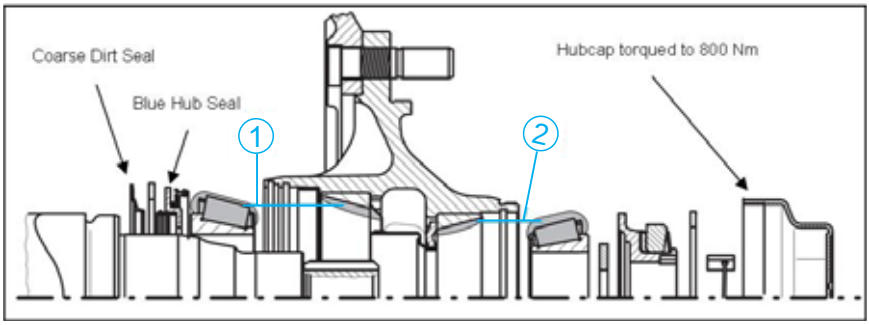

ECO Plus 3

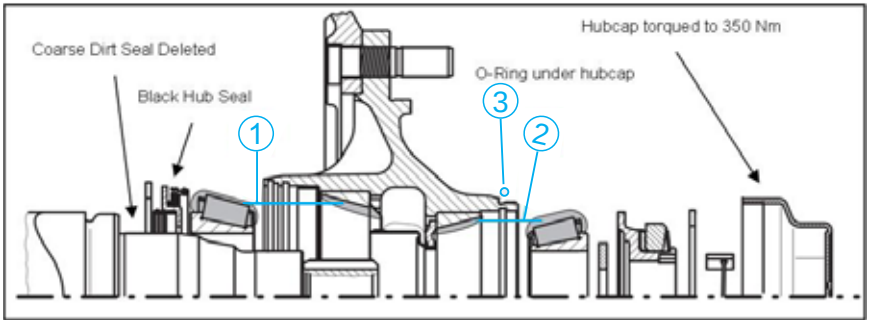

	BPW special longlife grease ECO-Li Plus	
	Grease quantity per taper roller bearing	
	(1) Inner bearing	(2) Outer bearing
Manual greasing	170g	120g
Greasing with grease applicator	160g	100g

The **ECO Plus** seal is blue in colour while the **ECO Plus 3** seal is black in colour.

Caution:
Do not submerge ECO Plus or ECO Plus 3 Hub Unit axle nut or seal in cleaning solution. Wipe off old grease with clean rag and re-coat with grease as per instructions in main body of text.

1 ECO Hub Unit

- every 1 to 3 years or 250,000 km to 500,000 km depending on conditions.

Clean taper roller bearings and seals thoroughly, dry and check for reuseability. Re-place oil seal if necessary. It is recommended that the taper roller bearings are thoroughly inspected and replaced if necessary.

Work BPW special longlife grease **ECO-Li Plus** thoroughly into the cavities between the taper rollers and the cage in both taper roller bearings. (For grease quantity see illustration on page 19). Smear any residual grease into the hub's outer bearing race. Smear the lip of the seal all round with BPW special longlife grease **ECO-Li Plus**.

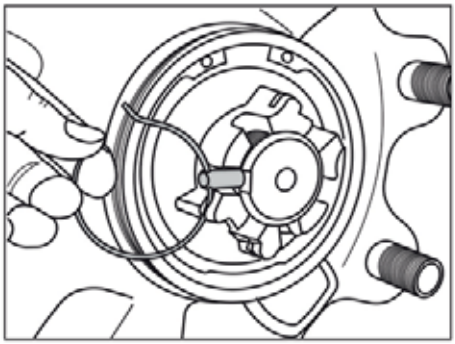

Clean the journals of the axle stub (metal must be bright, dry and free from grease). Spray journals with **BPW ECO Assembly and Protection Spray (A&P Spray)**. Allow to dry for about ten minutes until the film changes to a marked matt colour.

Fit the BPW Hub Unit, tighten the axle nut with a **torque wrench** set on **150 Nm** whilst at the same time turning the ECO Hub Unit, until the torque wrench 'clicks'.

Back off the axle nut to the first available locking hole - **do not exceed 15°.**

Insert locking pin and secure retaining ring in grooves in axle nut.

Fit hubcap

ECO Hub Unit

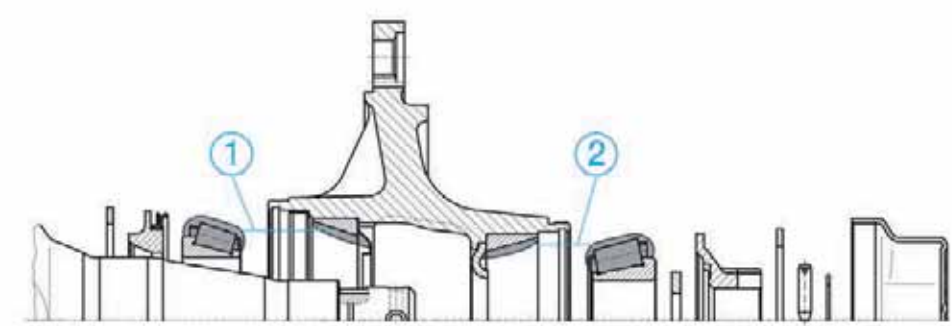

	BPW special longlife grease ECO-Li Plus	
	Grease quantity per taper roller bearing	
Axle load	1 Inner bearing	2 Outer bearing
6000 - 9000kg	120g	120g
10000 - 12000kg	170g	120g
13000 - 14000kg	230g	150g

Drum and disc brake maintenance - wheel studs

1 Check wheel nuts for tightness

- after the first run under loaded conditions, likewise after each wheel change.

Tighten the nuts diagonally using a torque wrench to the tightening torque shown in the table.

Wheel contact surfaces should not have additional coats of paint (risk of wheels becoming detached!)

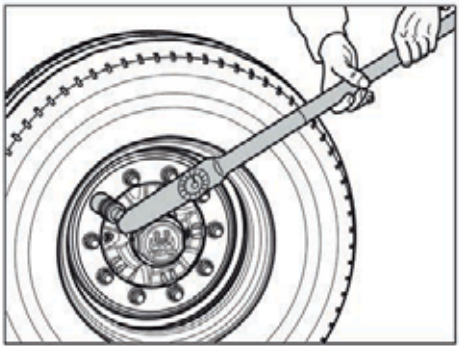

Tightening torques for wheel nuts

Wheel stud arrangement	Tightening torque	
M 20 x 1.5 M 22 x 1.5 M 22 x 2	**380 Nm** (360 - 400 Nm) **510 Nm** (485 - 535 Nm) **460 Nm** (435 - 485 Nm)	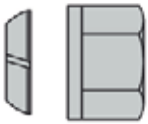
Spigot arrangement		**Wheel nut with collar**
M 18 x 1.5 M 20 x 1.5 M 22 x 1.5 M 22 x 1.5 alu wheels M 24 x 1.5	**350 Nm** (330 - 370 Nm) **480 Nm** (455 - 505 Nm) **630 Nm** (600 - 660 Nm) **630 Nm** (600 - 660 Nm) **860 Nm** (820 - 900 Nm)	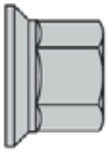

1 Check spider hub wheel nuts for tightness

- after the first run under loaded conditions, likewise after each wheel change,
- tighten nuts again after vehicle has covered 50 - 100 km.

The clamp nuts for 3, 5, and 6 spoke hubs are tightened crosswise according to the dia-gram.

3/4" Whitworth - **330-360 Nm (243-265 ft/lb)**

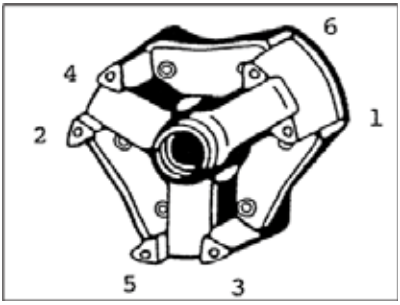

The torque must be checked periodically if the vehicle is subjected to difficult or harsh operating conditions.

The standard spacer band used on BPW 20” Dual Hubs is 4¼” and on 15” dual hubs is 4”. Different size spacer bands may be used depending on the size of the rims. All clamps for both single and dual hubs should be checked for deformation or cracking prior to re-use.

If the correct installation procedures have been followed, the rims will run true and the clamps must have clearance as shown on the diagrams.

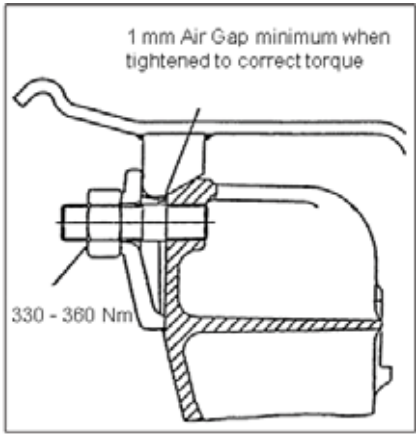

Single Wheel Fitment

For **dual wheel installation**, the gap between the spider clamp and the hub (dimension “x” in the diagram) can be a minimum of **0,5 mm** and a maximum of **9 mm**. When the gap, dimension “x”, is greater than 9 mm there will be insufficient contact area (dimension “z”) between the clamp and the hub to ensure proper clamping of the rims.

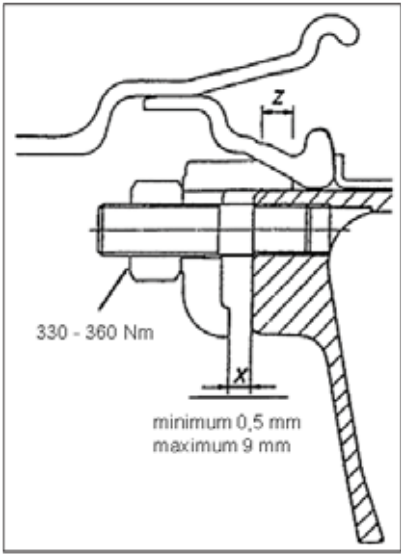

Dual Wheel Fitment

Note :

The tightening torques for wheel nuts listed in this chapter are for wheel studs and wheel nuts that are fitted dry, i.e. without oil or grease lubrication on the threads.

The torque values below can be achieved using a normal wheel nut spanner (from the vehicle tool kit) and a length of tubing.

However always check the setting with a torque wrench as soon as possible after-wards.

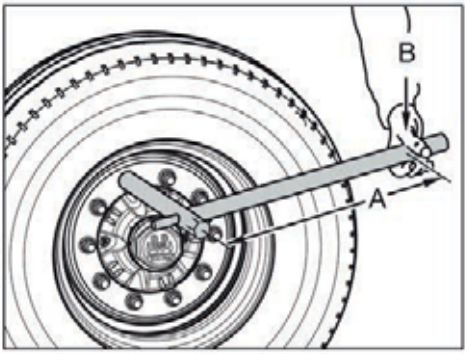

To achieve tightening torques with on-board tools

Tightening torque	Tubing length "A"	Physical weight "B"
270 - 310 Nm	300 mm 350 mm 400 mm	90 - 105 kg 78 - 89 kg 68 - 78 kg
320 - 350 Nm	350 mm 400 mm 450 mm 500 mm	91 - 99 kg 80 - 88 kg 71 - 78 kg 64 - 70 kg
360 - 400 Nm	400 mm 450 mm 500 mm 600 mm	90 - 99 kg 80 - 89 kg 72 - 80 kg 60 - 67 kg
440 - 480 Nm	500 mm 600 mm 700 mm	88 - 96 kg 73 - 80 kg 63 - 69 kg
480 - 540 Nm	600 mm 700 mm 800 mm	80 - 90 kg 67 - 77 kg 60 - 67 kg
600 - 660 Nm	700 mm 800 mm 900 mm 1000 mm	85 - 95 kg 75 - 83 kg 67 - 73 kg 60 - 66 kg
820 - 900 Nm	1000 mm	82 - 90 kg

Tightening Torques for fitting Brake Drum to Hub - Back Nut

1. Tighten to **M = 435Nm** (420Nm—450Nm) - (310 ft/lbs—330 ft/lbs)

Drum brake maintenance and visual inspection

2 Check brake lining thickness

- quarterly.

Open inspection hole by folding back the rubber flap (not required if the axle is fitted with the ECO Drum).

The brake lining should be replaced at a residual lining thickness of 5 mm (check with slide gauge) or on reaching the bottom of the indicator machined into the edge of the lining.

Re-insert the rubber flap (BPW 95).

If brake lining wear indicators are fitted to the slack adjusters, the minimum thickness of the brake linings is indicated by the horizontal position of the lever (when the brake is released).

If fitted, the Brake Monitor displays the “Service” signal when the wear sensor for drum brakes is installed. There is no warning function.

In certain cases the slack adjusters may not be fitted in the normal (i.e. vertical) position. In such instances, the position of the wear indicator will also be different. Linings should be changed when the wear indicator is approximately at right angles to the brake lever.

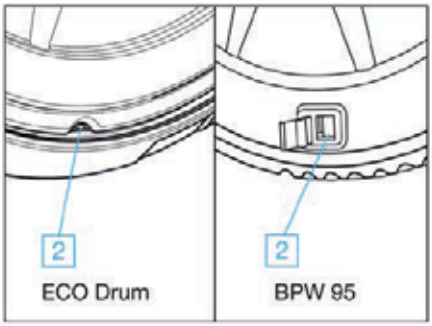

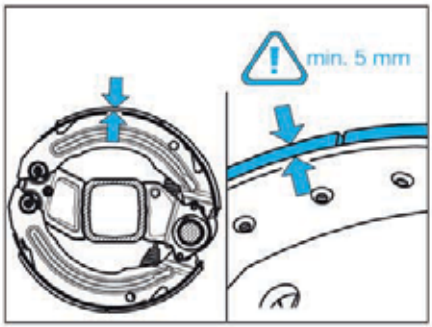

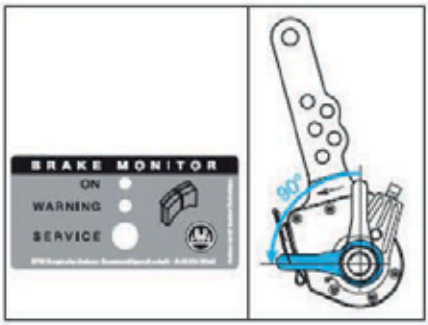

Drum brake maintenance and visual inspection

3 Check brake drum for cracks and check internal diameter

- quarterly.

Check the condition of the brake drum and ensure there is adequate remaining thickness. If the wear is approaching the wear edge, measure the brake drum and renew it if the maximum permitted amount of wear has been reached.

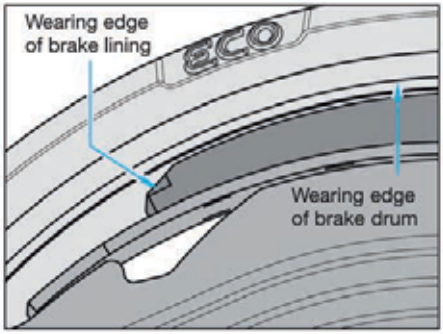

Maximum amounts of wear, measured at the position with the greatest wear:

Brake	Brake shoe width (mm)	Ø max. amount of wear (mm)	Ø skimming size (mm)
SN 420	120 /160	424	423
SN 420	180 / 200	425.5	424
SN 360	160 / 200	364	363
SN 300	200	304	303

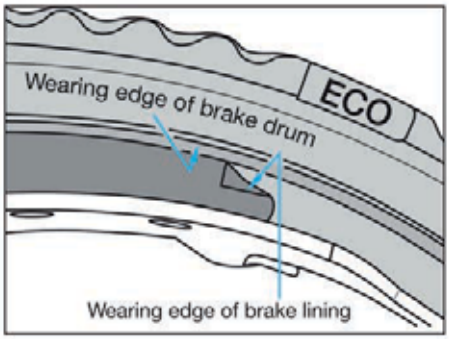

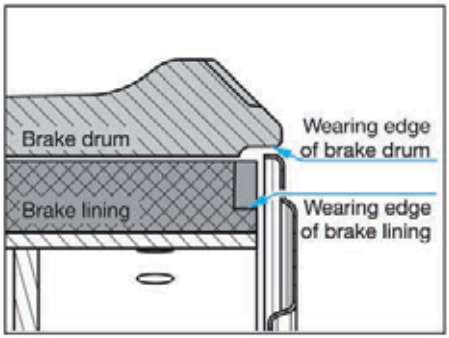

4 Check operation of the automatic slack adjuster

- quarterly

ECO-Master

Prevent vehicle from rolling away.
Remove rubber seal cap. Turn back adjustment screw, while keeping clutch sleeve pressed down, by approximately 3/4 of a turn in a counter clockwise direction using a 19 mm ring spanner. A play of at least 50 mm with a lever length of 150 mm must be available.

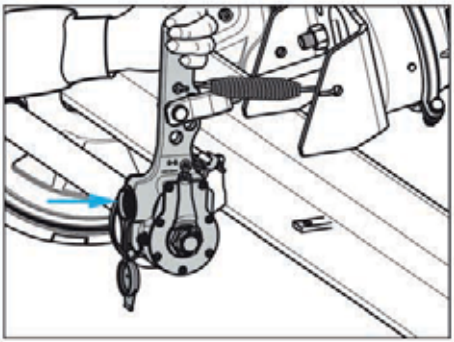

Actuate the brake lever several times by hand. When this is done automatic adjustment must take place smoothly. Engagement of the clutch coupling is audible and on the return stroke the adjustment screw turns slightly in a clockwise direction.

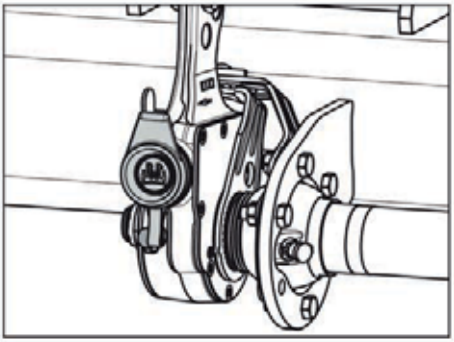

Grease with **ECO-Li** Plus special longlife grease and re-fit rubber seal cap.

4 Readjust manual slack adjuster

- monthly.

Ensure that trailer brakes are released. Use a 19 mm ring spanner to depress the lock collar. Turn spanner in a clockwise direction until brakes are applied.

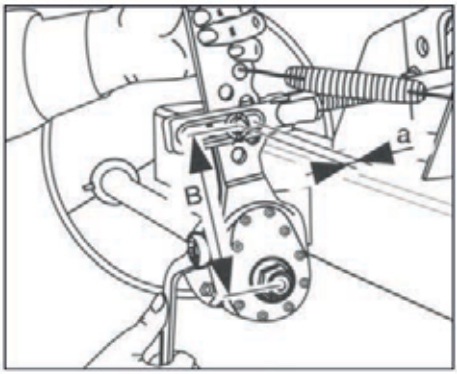

To set brakes turn spanner anti-clockwise until a free play “**a**” of 10-12 % of the connected brake lever length “**B**” is obtained. E.g. if brake lever length = 150 mm, then set play = 15-18 mm.

The cylinder push rod and slack adjuster should be at an angle of approximately 90° to each other when the brake is applied.

If unsure of the procedure please contact BPW Transpec.

5 Check bearing play of the ECO Plus Hub Unit and ECO Plus 3 Hub Unit

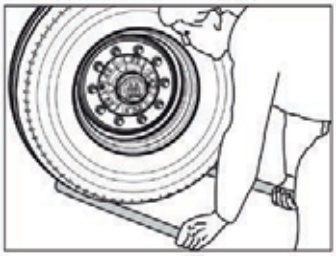

- at first service,
- thereafter every 26 weeks (twice annually).

Adjust bearing play - ECO Plus Hub Unit or ECO Plus 3 Hub Unit

1. Unscrew the hubcap.
2. Remove the hooked spring retaining ring with wedge from the axle nut.
3. Use a spanner to tighten the axle nut whilst at the same time turning the **ECO Plus Hub Unit** and **ECO Plus 3 Hub Unit** until the axle nut torque limiter operates. To achieve correct bearing adjustment the ECO Plus Hub Unit or ECO Plus 3 Hub Unit must complete several revolutions before the axle nut torque limiter activates.

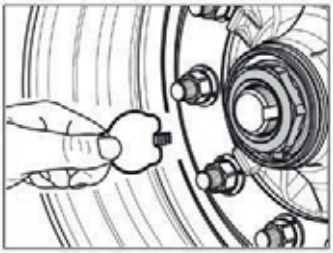

Important!
Do not use an impact driver or rattle gun to tighten axle nut.

4. Do not back off the axle nut.
5. Fit the retaining key in the groove between the axle stub and the axle nut.
6. Clip retaining ring into groove around outside of axle nut.
7. Fit ECO Plus hubcap—torque to 800Nm (590 ft/lbs)
   Fit ECO Plus 3 hubcap—torque to 350Nm (260 ft/lbs)
   With ECO Plus 3 always fit new O-ring
8. As a final check, the bearing adjustment may be verified by repeating the bearing play check as outlined at the top of the page. No axial play should be present with properly adjusted bearings on a BPW ECO Plus Hub Unit or ECO Plus 3 Hub Unit.

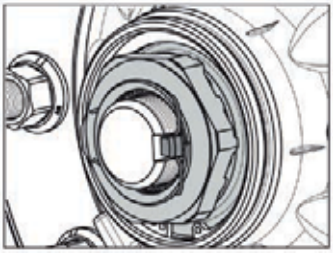

Visual Inspection

- quarterly. Check all components for damage and wear.

5 Check bearing play of the ECO Hub Unit

- at first service,
- thereafter every 26 weeks (twice annually).

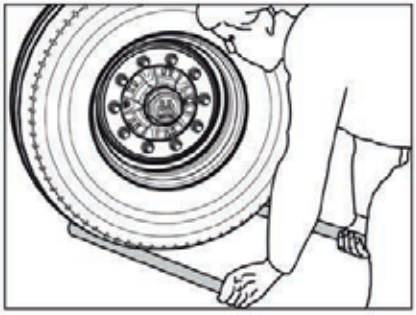

Adjust bearing play - ECO Hub Unit

1. Unscrew the hubcap.
2. Remove the spring retaining ring with retaining bolt from the axle nut.
3. Use a torque wrench set on 150 Nm to tighten the axle nut whilst at the same time turning the ECO Hub Unit until the torque wrench ‘clicks’. To achieve correct bearing adjustment the ECO Hub Unit must complete several revolutions before the torque wrench ‘clicks’.
4. Back off the axle nut to the first available locking hole - do not back off more than 15°.
5. Fit the retaining bolt into the relevant hole.
6. Clip retaining ring into groove around outside of axle nut.
7. Fit hubcap - torque to 800 Nm (590 ft/lbs).
8. As a final check, the bearing adjustment may be verified by repeating the bearing play check as outlined at the top of the page. No axial play should be present with properly adjusted bearings on a **BPW ECO Hub Unit**.

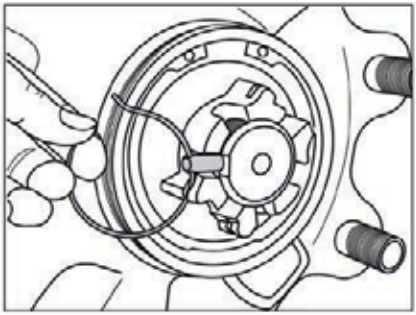

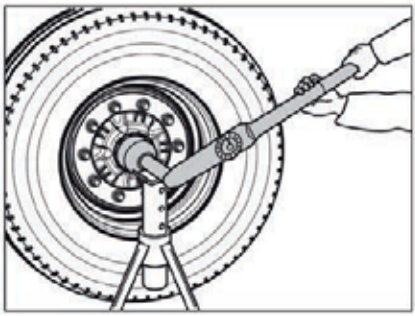

Visual Inspection

- quarterly.

Check all components for damage and wear.

From late 2019 BPW have offered their ECO Plus 3 Disc Braked Axles with the BPW TS2 Style Disc Brake Caliper

1 FUNCTION

PRINCIPLE: SLIDING CALIPER BRAKE

1. Applying the brake

During braking, the push rod of the spring brake or diaphragm cylinder presses onto the brake lever (1).
The offset position of the brake lever amplifies the force created by the brake cylinder and allows it to be transferred to the traverse (3) via a needle bearing (2).
This clamping force acts on the inner brake lining (5a) via the traverse and the threaded sleeve (4).
Once the clearance between the inner brake lining and the brake disc (6) has been overcome, the reaction force is transferred to the outer brake lining (5b) via the brake caliper.
The braking moment for the wheel results from the contact pressure of the brake linings on the brake disc.
The radial stabilizer force created by the responding brake lining at this time is transferred directly to the axle via the brake caliper.

2. Releasing the brake

When the braking pressure decreases, the pressure springs (7) move the brake actuating unit back to its initial position.

3. Adjustment

The brake is fitted with an automatic non-wearing adjusting device to maintain a constant clearance between the brake linings and the brake disc.

Each brake application also simultaneously actuates the adjustment hub (9), which is coupled with the brake actuating unit via a shift sleeve (10), via an adjustment pin (8) in the brake lever. A reset shaft (11) with toothed washer (12) connected to the shift sleeve defines the clearance of the disc brake via the tooth pitch.

When the clearance increases due to brake lining and brake disc wear, the threaded sleeve (4) is turned by the degree of wear through adjustment via a wrap spring (13).

When the clearance is correctly set, the wrap spring slides through without turning the threaded sleeve. The overall clearance (total clearance on both sides of the brake disc) measures 0.7 to 1.3 mm.

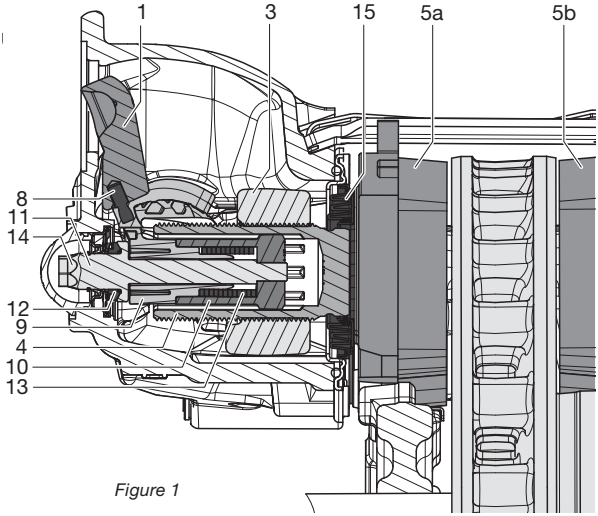

Figure 1

4. Reset mechanism

The disc brake features a reset mechanism at the back for replacing the brake linings and brake disc.

To reset the threaded sleeve to its initial position, the reset shaft equipped with a hexagon connection (14) is moved back using a slight torque, or the clearance of the brake is preset.

5. Brake cylinder

When compressed air is applied to the brake cylinder, an air cushion forms behind the diaphragm. This forces the push rod out of the cylinder via the diaphragm plate.

The brakes may only be fitted with brake cylinders which - apart from the sealing of the flange surface - are fitted with a so-called ”inner sealing”.

This means that the push rod acting on the lever (1) must be hermetically sealed from the secondary chamber of the brake cylinder, as otherwise the clamping mechanism will be completely open to its surroundings.

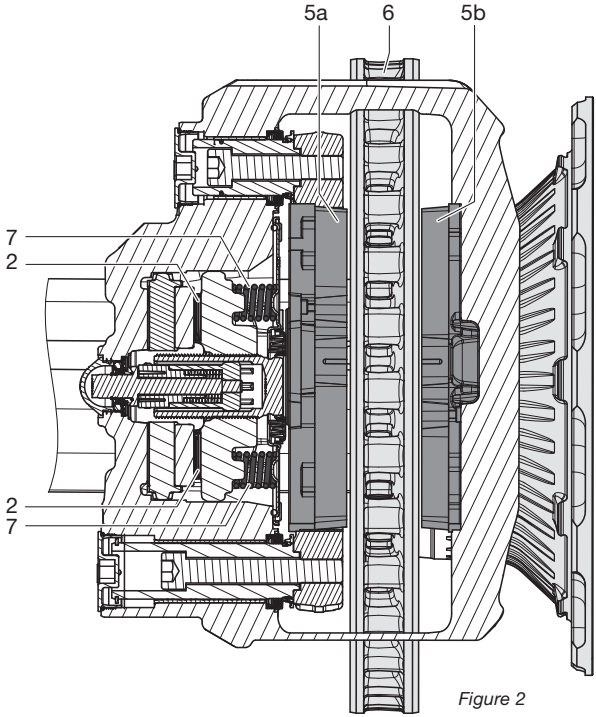

Figure 2

1 Brake lever
2 Needle bearing
3 Traverse
4 Threaded sleeve
5a Inner brake lining
5b Outer brake lining
6 Brake disc
7 Pressure springs
8 Positioning pin
9 Adjustment hub
10 Shift sleeve
11 Reset shaft
12 Toothed washer
13 Wrap spring
14 Hexagon connection
15 Bellow with pressure plate

2 Check brake lining thickness

– quarterly –

Check the brake lining thickness regularly, e.g. when checking the tyre pressure, or after 3 months at the latest.

Warning!
Worn brake linings reduce the braking performance and can ultimately cause the brakes to fail completely!

Inspection can be done as follows:

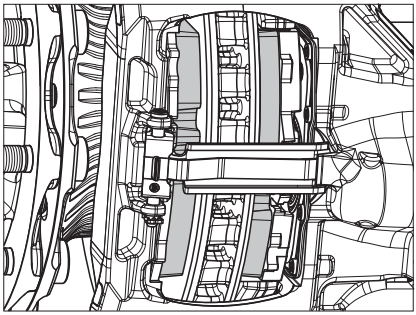

The brake lining thickness can be checked by the position of the brake caliper in relation to the welded-on brake anchor with the wheels mounted (approximate wear indicator).

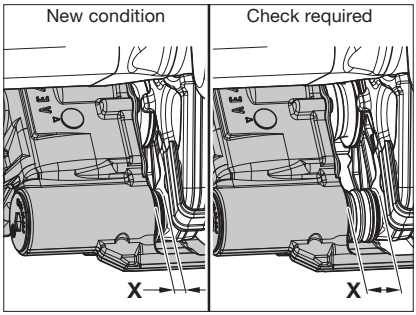

Dimension x (distance between brake caliper and brake anchor):
12 mm => new condition

TS2 3709 / 4309
31 mm => max. permissible brake lining wear 19 mm
35 mm => max. permissible wear for brake lining and brake disc

The brake linings must be removed to inspect them more closely.

Scorched, glazed over, or oily brake linings must be replaced immediately.

The remaining brake lining thickness must **not** be less than 2 mm (check with a caliper gauge).

Small ruptures at the edges are allowed; large ruptures on the surface of the friction linings are not permitted.

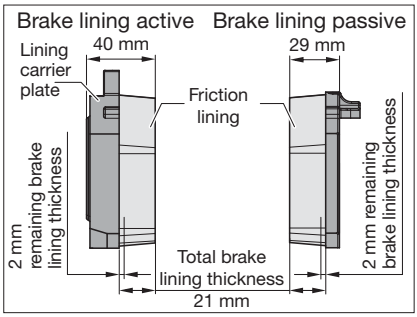

Repair note!
Only replace brake linings on the same axle at the same time!

Visual inspection
– every six months –

Check all components for damage, wear and corrosion.

Lubrication and maintenance

3 **Brake disc**
(Checking the condition of the brake disc)
– Every six months when used within Europe and every three months when used outside Europe –

Sections **A - D** (fig.) show the possible conditions of the disc surface:

A → Network-type cracks = permissible

B → Radial cracks up to max. 1.5 mm width and depth = permissible

C → Uneven disc surface less than 1.5 mm = permissible

D → Continuous cracks = **not permissible**

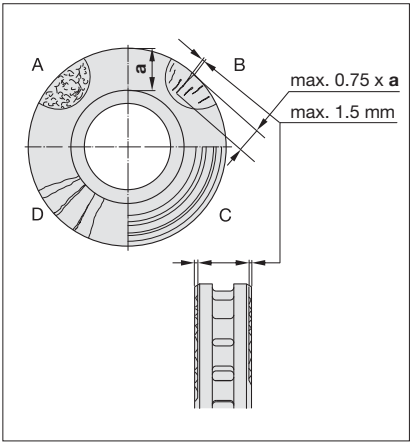

Technical data:
Disc thickness, new = 45 mm
Minimum permissible disc thickness = 37 mm
Maximum wear per side = 4 mm
(check with a caliper gauge where the brake linings make contact).

In the case of surface conditions as described for sections **A - C**, the brake disc can be used until the minimum permissible disc thickness has been reached.

Repair note!
To prevent the brake disc from being damaged, the brake linings must be replaced at the latest when the brake lining thickness has been measured at 2 mm over the carrier plate.

Repair note!
Brake discs should always be replaced on the same axle at the same time. The brake linings should also be replaced when new brake discs are installed.

Warning!
If these instructions are not followed, the brake disc can be damaged and the braking effect can decrease or completely fail when the brake linings are worn down.

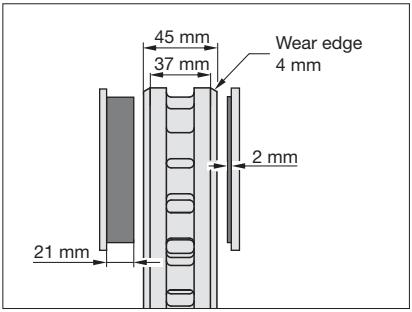

braking effect can decrease or com-

Lubrication and maintenance

4 **Check the brake caliper guide system**
(check clearance and adjustment)
– Every six months when used within Europe, every three months when used outside Europe – (e.g. within the scope of the statutory checks)

Secure the vehicle from rolling away.
Release the service and parking brake.

The brake cylinder and attachment parts for the brake linings can remain fitted.

Forcefully pushing the sliding caliper in the direction of the axle must cause the caliper to move approximately 0.7 to 1.3 mm (clearance).

If the clearance is not within this tolerance, the brake caliper guide must be checked and the clearance readjusted.

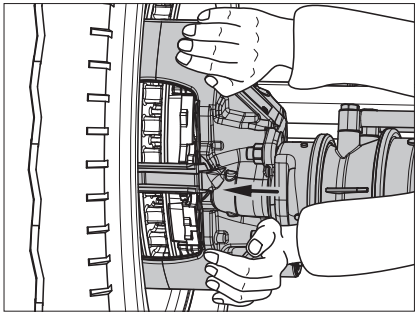

Close examination of the clearance with
<u>the wheels mounted</u>:

Use a dial gauge to determine the clearance.
For this purpose, attach a dial gauge holder to the axle beam and position the probe on the outside of the fixed bearing sealing cap (335) or on the brake cylinder.

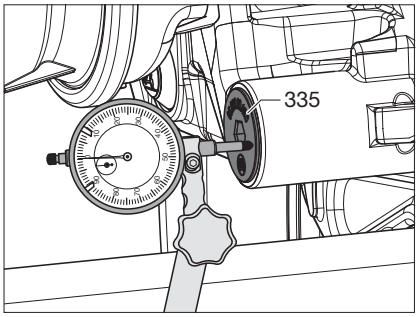

Close examination of the clearance with
<u>the wheels removed</u>:

Use a feeler gauge to check the clearance.

Forcefully push the sliding caliper in the direction of the axle centre. Insert the feeler gauge between the bellow with pressure plate (363) and the brake lining back plate (390).

If the clearance is not within the tolerance, the adjustment and the brake caliper guide should be checked.

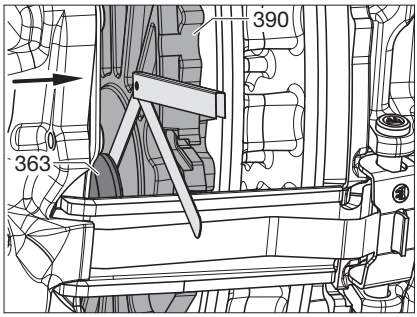

Lubrication and maintenance

Adjusting the clearance and checking the adjustment

1. Remove the sealing cap (370).
2. Turn the resetter with a spanner (AF 13) 90° **counterclockwise**.
3. Actuate the brake 5 to 10 times with approx. 2 bar.
4. When the sliding caliper is forcefully pushed in the direction of the axle, it must now be possible to move the sliding caliper by the clearance of 0.7 - 1.3 mm.

   If the clearance is correctly set, the adjustment is OK.
5. Squeeze the seal cap (vented) and press it into the brake caliper.

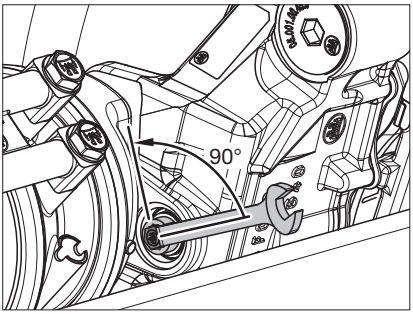

Checking the brake caliper guide:

The brake caliper guide must be checked if the clearance has not been adjusted correctly.

It must be possible to move the brake caliper slightly from end stop to end stop.

The guide bushes (328, 348) are sealed by the bellows (354) and the sealing caps (335).

Inspect the bellows and sealing caps for cracks, damage, and proper seating and replace them if necessary.
Sealing caps that have been removed must be replaced by new ones.

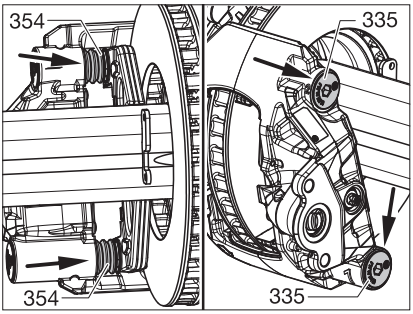

Check the brake caliper bearing play:

The bearing play of the brake caliper can be determined using a dial gauge. Attach the dial gauge holder to the axle beam and position the gauge on the brake caliper housing on the brake cylinder holder.

Press the brake caliper on the brake cylinder downwards vertically to its installation position and set the dial gauge to "zero".

Press the brake caliper upwards and determine the play of the bearing on the dial gauge.

If the play of the bearing of a brake caliper exceeds 1.0 mm, the brake caliper bearing must be replaced.

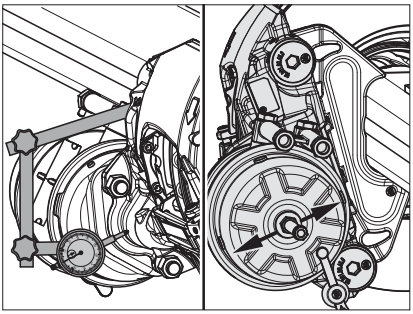

Lubrication and maintenance

5 **Check the bellow with pressure plate**
– at every brake lining replacement and at the latest annually,
every six months when used outside Europe –

Secure the vehicle from rolling away.
Release the service and parking brake.

The service brake and spring brake must be in the released condition.

Pull the pressure plate with heat protection cover and bellow (363) out of the dust cover slightly. Check the complete unit for proper seating and damage; replace it if necessary.

Check the dust cover (arrow) for deformation. If a deformation is detected, the brake caliper must be replaced!

If a thermal overloading of the brake has been detected, the bellow with pressure plate (363) must be replaced.

Before the new bellow with pressure plate is installed, the adjusting unit must be checked for corrosion and ease of movement .

After the check or replacement, the bellow must be folded correctly and returned to its initial position. The pressure plate rests against the threaded sleeve.

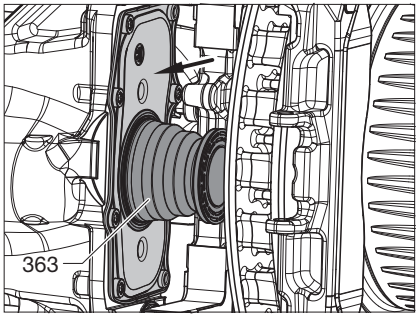

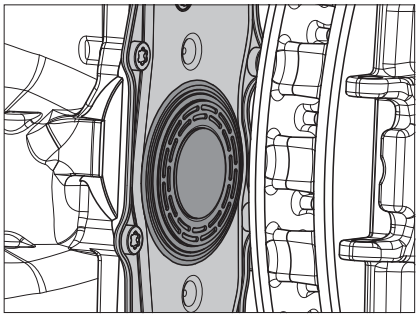

Repair note!
The bellow with pressure plate must be replaced each time that the brake disc is changed.

Repair note!
The penetration of dirt and moisture causes corrosion and effects the operation of the clamping mechanism and adjustment.

Troubleshooting

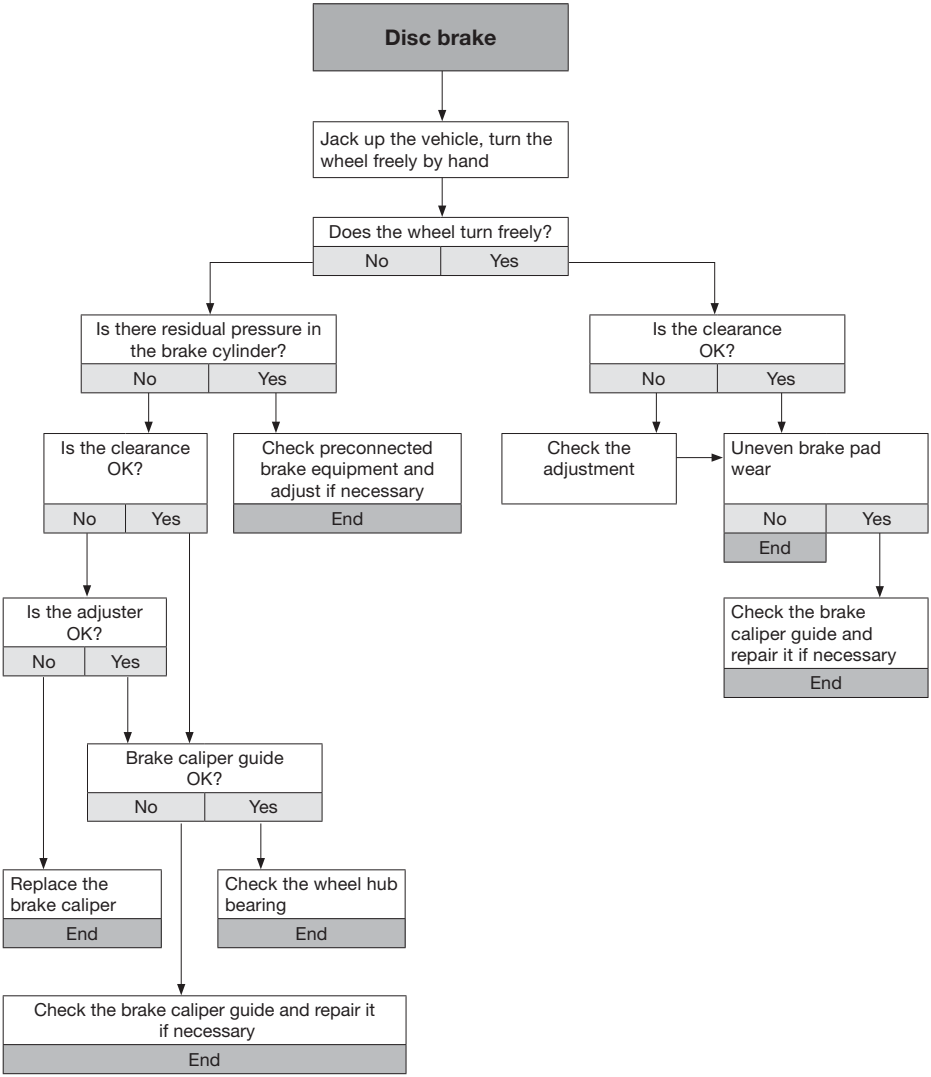

Tightening torques

Item	Description	Thread / spanner size	Tightening torques
325, 345	Brake caliper fixing screws ⚠ Use new fixing screws for every assembly! ⚠	M 16 x 1.5 / AF 14	M = **260 Nm** (250 - 270 Nm) or otherwise M = 150 Nm +180° rotation angle
335	Sealing caps of the caliper guide ⚠ Use new sealing caps for every assembly! ⚠	AF 14	M = **15 Nm** (15 - 20 Nm)
410, 411	Attachment nuts for brake cylinder	M 16 x 1.5 / AF 24	M = **180 Nm** (180 - 210 Nm)
410, 411	Spring brake bolt on spring brake cylinder		M = **40 Nm** (30 - 50 Nm)
460	Hub caps ECO Pus 3 ECO^{Plus}	AF 110 AF 110	M = 350 Nm M = 800 Nm
479	Wheel nuts	M 22 x 1.5 / AF 32 Stud alignment Spigot alignment Alloy wheels	 M = **510 Nm** (485 - 535 Nm) M = **630 Nm** (600 - 660 Nm) M = **630 Nm** (600 - 660 Nm)
510	Locking screws for dust cover	M 10 x 15 / AF 13	M = **25 Nm** (23 - 28 Nm)
511	Locking screws for sensor bracket	M 8 x 20 / AF 13	M = **25 Nm** (23 - 28 Nm)
561	Cylinder head screw for fastening the exciter ring	M 6 / AF 5	M = 8 Nm

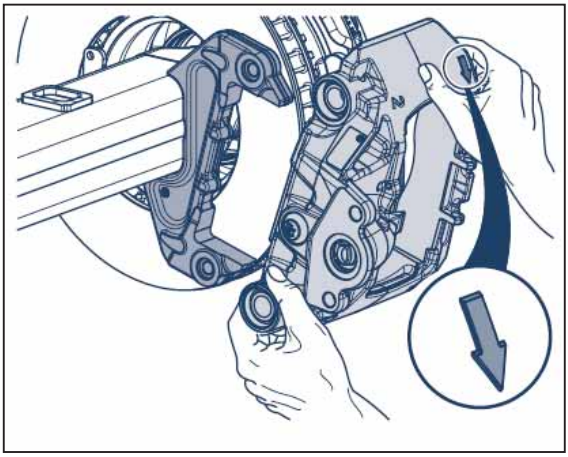

The use of the Offset Tappet Design means that the calipers are now directional.

The arrow cast into the caliper shows the direction that the disc must turn when the vehicle is moving forwards.

Always tighten the mounting bolt in the fixed bearing (longer mounting bolt - 1 in the picture) first and then the floating bearing (shorter mounting bolt - 2 in the picture) second.

150Nm + 180° rotation angle - or otherwise **260Nm**

Special Tools

Description	Illustration of tool
TS2 supplemental set for TSB tool case BPW item number: **09.801.08.82.0**	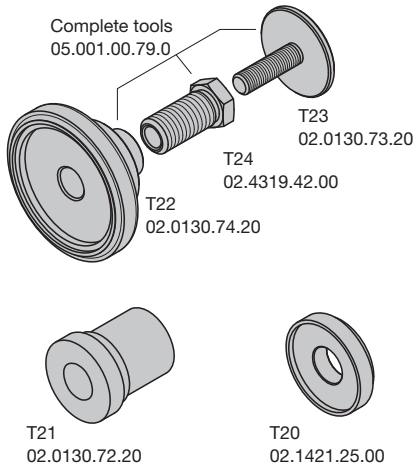

If you already have the tool kit for refurbishing the TSB style Disc Brakes 99.00.000.9.68 – then all you need to purchase to refurbish TS2 style Disc Brakes is the supplemental kit shown above – 99.801.08.82.0

Brake Tools

If you do not have the Tool Kit referred to above then you will need the full kit shown here;

ECO Disc tool case for TS2 / TSB

BPW item number:

99.00.000.9.72

See pages 100-110 for complete Tool Details

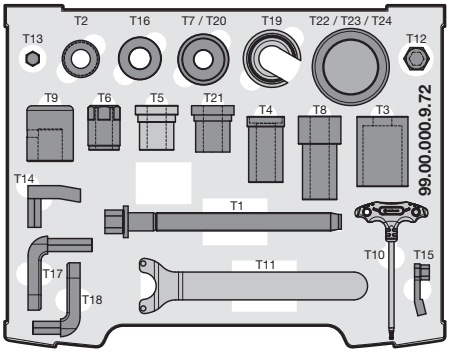

Disc brake maintenance and visual inspection - TSB Type Disc Brakes

TSB Style Disc Brakes - BPW ECO Disc

From mid 2010 BPW Transpec have offered the ECO Plus Disc Braked Axles with the BPW Disc Brake Caliper - BPW ECO Disc (TSB Type).

Please note that the maintenance schedules and procedures for the TSB type disc brakes differ from the SB type disc brakes. The BPW ECO Disc (TSB Type) can be identified by the adjustment screw being placed on the outer face of the caliper next to the pad retention strip. The SB style Disc Brake has the adjustment screw on the rear of the caliper.

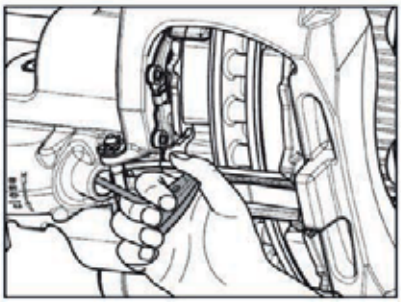

TSB Style Caliper Adjustment Screw

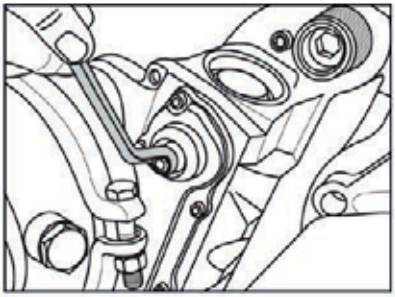

SB Style Caliper Adjustment Screw

For more information on Caliper Type Identification please see page 115

For details of maintenance on the **SB Type** disc brakes please see pages 46-53.

Premature brake pad wear on the disc brake

Even at high temperatures, disc brakes display stable braking properties and a high level of safety. Excessive temperatures do not make themselves apparent through brake fading and should be avoided. This effect leads to increased wear when used under these conditions.

The disc brakes response is so good that a pressure lead is not necessary or should be restricted to a maximum of 0.2 bar.

Other solutions to premature brake pad wear:

- Prescribed maintenance work must be performed at the specified intervals.
- Use the retarder or engine brake to adjust the vehicle's speed.
- Think and plan ahead while driving.
- Drop down to a lower gear in good time.
- Automatic slack adjusters on towing vehicle.
- Do not use 'handpiece' to activate trailer brakes.

1 Check wheel nuts for tightness

- after the first run under loaded conditions, likewise after each wheel change.

Tighten the nuts diagonally using a torque wrench to the tightening torque shown in the table.

Wheel contact surfaces should not have additional coats of paint (risk of wheels becoming detached!)

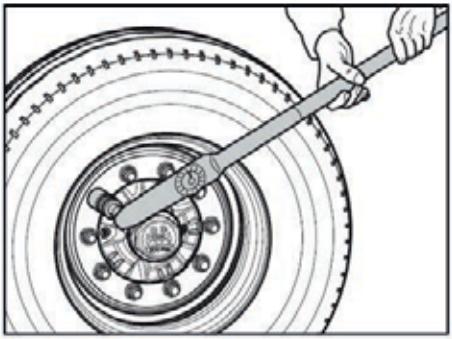

Tightening torques for wheel nuts

Wheel stud arrangement	Tightening torque	
M 20 x 1.5 M 22 x 1.5 M 22 x 2	**380 Nm** (360 - 400 Nm) **510 Nm** (485 - 535 Nm) **460 Nm** (435 - 485 Nm)	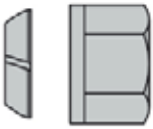
Spigot arrangement		**Wheel nut with collar**
M 18 x 1.5 M 20 x 1.5 M 22 x 1.5 M 22 x 1.5 alu wheels M 24 x 1.5	**350 Nm** (330 - 370 Nm) **480 Nm** (455 - 505 Nm) **630 Nm** (600 - 660 Nm) **630 Nm** (600 - 660 Nm) **860 Nm** (820 - 900 Nm)	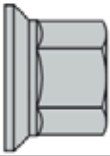

Tightening Torques for TSB Caliper Bolts

If the caliper is removed for any reason the cap screws that attach the caliper to the axle beam must be replaced. Never attempt to re-use the old cap screws.

1. The correct tightening torques for the new cap screws are: -

Tighten the cap screws to **150Nm** and then turn through **180° rotation**

Or alternatively

Tighten to **M = 260Nm** (250Nm - 270Nm) - (185 ft/lbs - 200 ft/lbs

Tightening Torques for fitting Disc Rotor to Hub

1. Tighten to **M = 435Nm** (420Nm - 450Nm) - (310 ft/lbs - 330 ft/lbs)

Disc brake maintenance and visual inspection - TSB Type Disc Brakes

2 Check brake pad thickness

- every 12 weeks (quarterly.)

The brake pad thickness must be checked regularly, e.g. during the tyre inflation pressure check. The intervals must not be more than 12 weeks.

The brake pad thickness can be checked where the brake caliper meets the welded anchor plate with the wheels mounted (approximate wear indicator).

Dimension x (distance between brake caliper and brake anchor plate):

9mm = when new

30mm = maximum permissible brake pad wear, 21 mm.

34mm = maximum permissible wear for brake pad and brake disc.

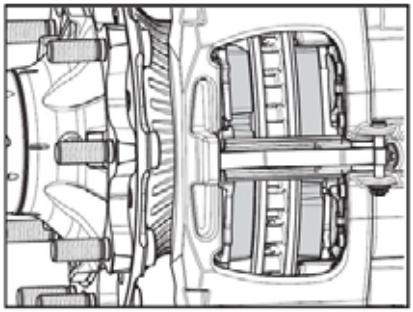

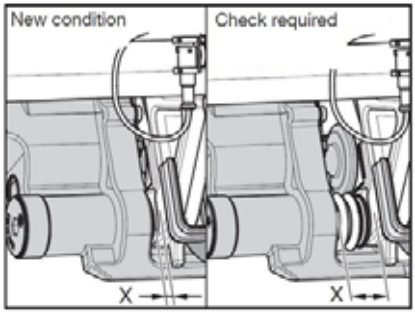

☞ The brake pads must be removed to inspect them more closely.

Scorched, glazed over, or oily brake pads must be replaced immediately.

The remaining brake pad thickness must not undershoot 2mm (use a caliper gauge for this).

Hairline cracks at the edges are acceptable, replacement is required if more sizable surface cracks are present.

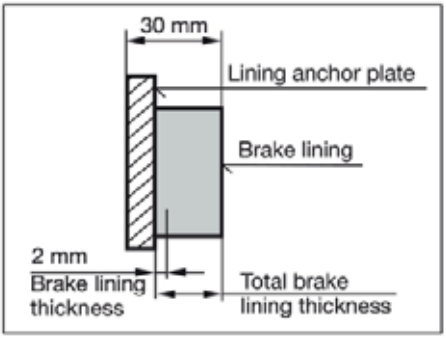

Visual Inspection

- every 26 weeks (twice annually).

Check all components for damage and wear

3 Brake disc

Check the condition of the brake disc

- every 12 weeks (quarterly) under harsh conditions.
- every 26 weeks (twice annually) under highway conditions.

Sections A - D (see figure) show the possible conditions of the disc surface:

A:	Network-type tears	= permissible
B:	Radical cracks up to max. 1.5mm width and depth	= permissible
C:	Uneven disc surface less than 1.5mm	= permissible
D:	Continuous cracks	= not permissible

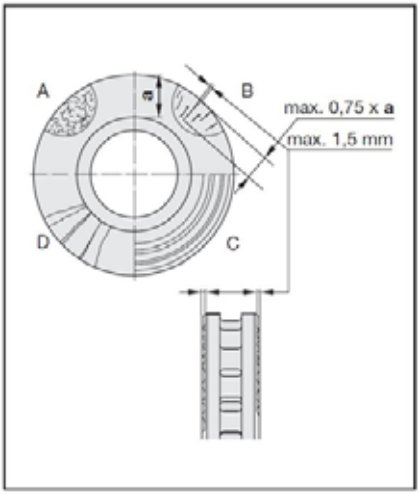

Technical details:

- disc thickness, new = 45mm
- minimum permissible disc thickness (check with a vernier gauge) = 37mm

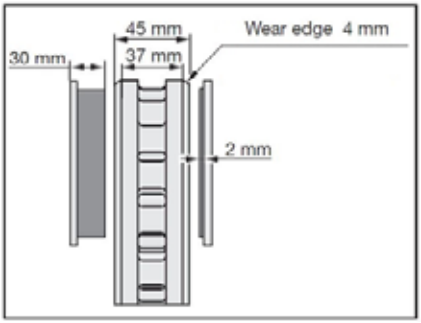

In the case of surface conditions **A - C**, the brake disc can be used until the minimum permissible disc thickness has been reached.

IMPORTANT!

To prevent damage to the brake discs, the brake pads should be replaced when their thickness (excluding backing plate) is **2 mm** or less.

If this instruction is not adhered to, there is a danger that braking performance could be seriously reduced.

Disc brake maintenance and visual inspection - TSB Type Disc Brakes

4 5 Check play and check adjustment

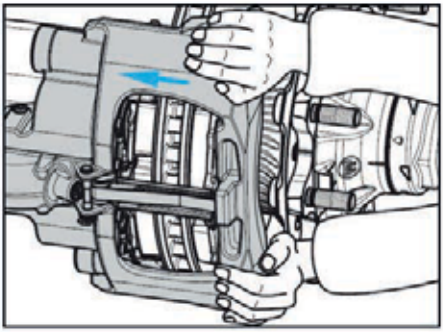

Checking the brake caliper guide system

- every 12 weeks (quarterly) under harsh conditions.
- every 26 weeks (twice annually) under highway conditions

Prevent the vehicle from rolling away. Release the service and parking brakes. The brake cylinder and fasteners for the brake pads can remain fitted.

Forcefully push the sliding caliper in the axle direction.

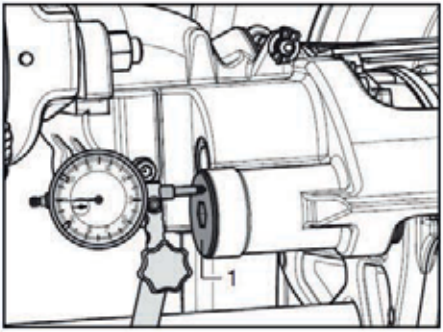

For close inspection of play with wheels mounted.

Use a dial gauge to determine the play.

To this end, attach a dial gauge holder to the axle housing and position the button on the outside of the screw plug (1) or on the brake cylinder.

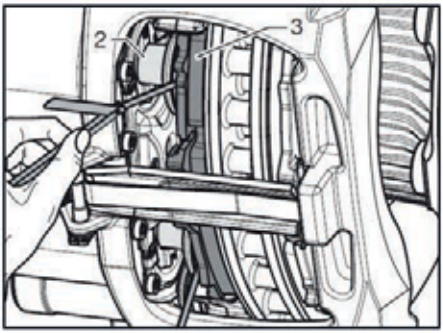

For close inspection of play with wheels removed.

Check the play using two feeler gauges.

Forcefully push the sliding caliper toward the centre of the axle and insert the gauges between the pressure plates (2) and the pad backing plate (3).

☞ **The caliper must move approximately 0.7 to 1.3 mm (play).**

If play is not within this tolerance, the brake caliper guide must be checked and readjusted.

Set play and check adjustment

If play is not within tolerance check the adjustment, which will require the wheels to be removed.

Prevent the vehicle from rolling away. Release the service and parking brakes. The brake cylinder and fasteners for the brake pads can remain fitted.

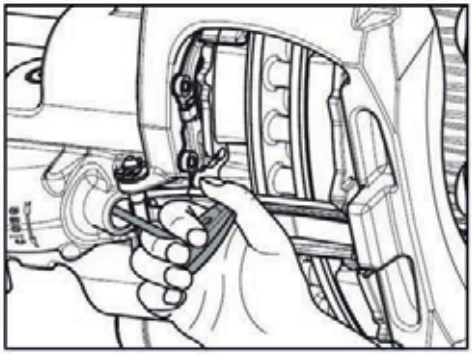

1. Remove the plug.
2. Using a torx wrench (T25), depress the return spring and turn clockwise until it skips 2 times (2 clicks).
3. Actuate the brake 5 to 10 times with a force of approximately 2 bar.
4. Forcefully push the sliding caliper in the axle direction. The play exhibited at this time must be between 0.7 - 1.3mm. **Adjustment is correct if play is within this tolerance.**
5. Reinsert the plug.

Check brake caliper guide

The brake caliper guide must be checked if the play could not be adjusted properly.

Remove the brake pads, see BPW ECO Disc Workshop Manual for more details.

It must be possible to move the brake caliper easily from stop to stop, when pushing/pulling in the axle direction.

The guide bushings are sealed by the bellows (4) and the screw plug (1). Inspect the bellows and screw plugs for cracks, dam-age, and proper seating and replace if necessary.

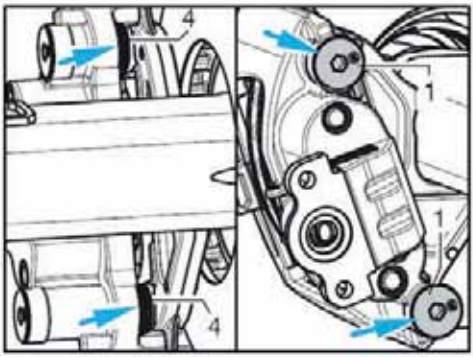

☞ **Screw plugs that have been removed must be replaced, not re-used.**

See BPW ECO Disc Workshop Manual for more information on how to repair the brake caliper guide.

Disc brake maintenance and visual inspection - TSB Type Brakes

Check the brake caliper bearing play:

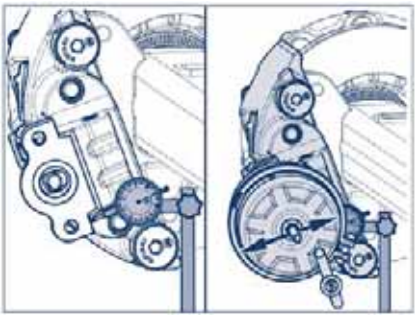

The bearing play of the brake caliper can be established using a dial gauge.

Chock the vehicle wheels and release the brakes.

Attach the dial gauge holder to the axle beam and position the gauge pointer facing the long locating bearing on the edge of the cylinder flange.

Press the brake caliper away from the axle beam as far as it will go and set the dial gauge to zero.

Now press the caliper in towards the axle as far as it will go and read the bearing play on the dial gauge.

If the brake caliper bearing play exceeds 1.8mm the brake caliper bearing must be replaced.

6 Check the bearing play

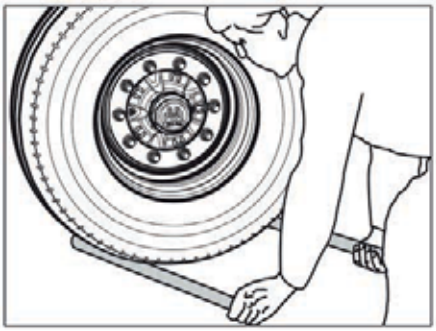

- every 26 weeks (twice annually).

Prevent the vehicle from rolling away.

In order to check the bearing play lift the axle until the wheels are off the ground.

Release the brake.

Apply a lever between the tyre and the ground and check the play.

The bearing play must be reset if the bearing play can be felt.

See instructions on setting bearings for ECO Plus Hubs and ECO Plus 3 Hubs (pages 16 - 17) and ECO Hubs (pages 18 - 19).

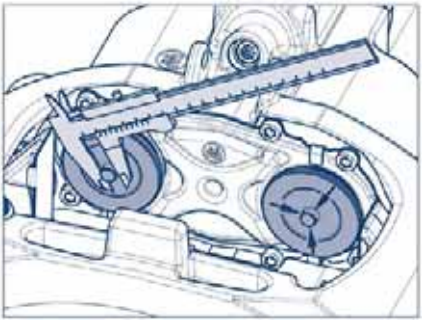

With a vernier gauge, measure the diameter of the concentric pin on the two thrust pieces.

When it reaches a minimum of 8mm, change the thrust piece.

Measure the hole in the back of the brake pads.

When it exceeds a maximum of 14mm in any direction the pads should be replaced.

7 Check Coarse dirt seals at the tappets

- at every brake lining replacement.
- every 26 weeks (twice annually).

Prevent the vehicle from rolling away.

Release the service and parking brakes.

See workshop manual ECO Disc for information on how to remove the brake pads.

The service brake and spring actuator must be released.

Unscrew the tappets (362) beyond the adjuster (minimum 30mm) until the coarse dirt seals (365) are plainly visible.

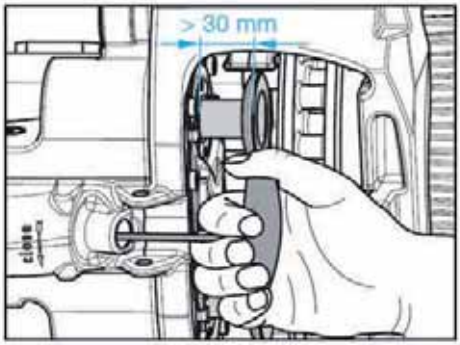

Ensure proper seating. (Visual inspection)

Repair guide:

Penetrating dirt and damp cause corrosion and affect the operation of the clamping mechanism and adjustment.

When new tappets (362) are fitted firmly tap the bayonet clips in the direction of the arrow to ensure a tight fit.

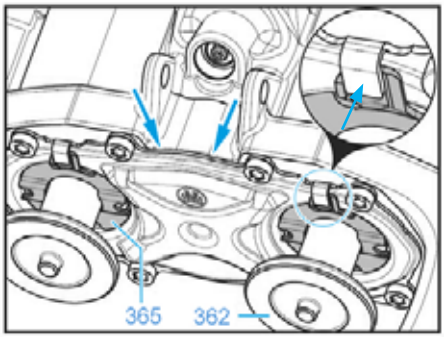

The bellows (363) must be replaced if thermal overloading was detected.

Only new parts may be used.

The adjustment device must be checked for corrosion and ease of movement before the new parts are installed.

See workshop manual ECO Disc for information on how to replace the bellows.

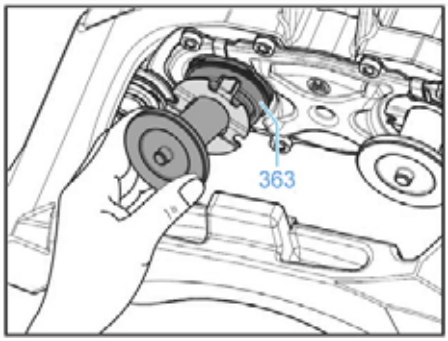

Disc brake maintenance and visual inspection - SB Type Brakes

Up until mid 2010 BPW Disc Brake axles were available with the SB type disc brakes supplied by Knorr Bremse. From mid 2010 BPW Disc Brake axles were supplied with BPW's own TSB type ECO Disc brake - see pages 38 - 45 for details.

Please note that the maintenance schedules for the SB type disc brakes differ from the TSB type disc brakes. The BPW ECO Disc (TSB type) can be identified by the adjustment screw being placed on the outer face of the caliper next to the pad retention strip. The SB type Disc Brake has the adjustment screw on the rear of the caliper.

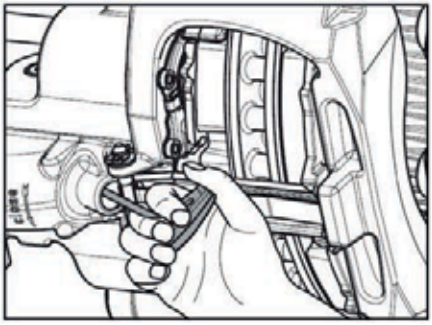

TSB Type Caliper Adjustment Screw

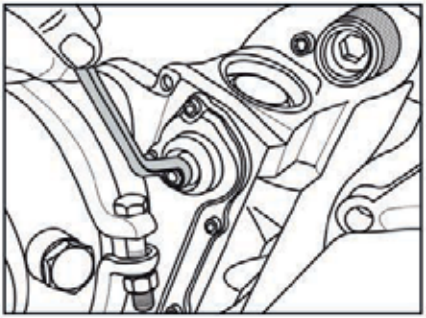

SB Type Caliper Adjustment Screw

For more information on Caliper Type Identification please see page 115

For details of maintenance on the **TSB type** disc brakes please see pages 38 - 45.

Premature brake pad wear on the disc brake

Even at high temperatures, disc brakes display stable braking properties and a high level of safety. Excessive temperatures do not make themselves apparent through brake fading and should be avoided. This effect leads to increased wear when used under these conditions.

The disc brakes response is so good that a pressure lead is not necessary or should be restricted to a maximum of 0.2 bar.

Other solutions to premature brake pad wear:

- Prescribed maintenance work must be performed at the specified intervals.
- Use the retarder or engine brake to adjust the vehicle's speed.
- Think and plan ahead while driving.
- Drop down to a lower gear in good time.
- Automatic slack adjusters on towing vehicle.
- Do not use 'handpiece' to activate trailer brakes.

1 Check wheel nuts for tightness

- after the first run under loaded conditions, likewise after each wheel change.

Tighten the nuts diagonally using a torque wrench to the tightening torque shown in the table.

Wheel contact surfaces should not have additional coats of paint (risk of wheels becoming detached!)

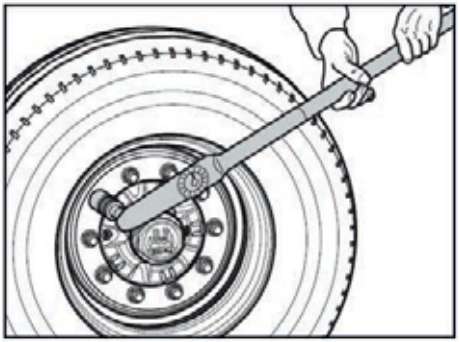

Tightening torques for wheel nuts

Wheel stud arrangement	Tightening torque	
M 20 x 1.5 M 22 x 1.5 M 22 x 2	**380 Nm** (360 - 400 Nm) **510 Nm** (485 - 535 Nm) **460 Nm** (435 - 485 Nm)	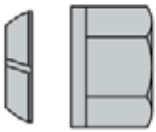
Spigot arrangement		**Wheel nut with collar**
M 18 x 1.5 M 20 x 1.5 M 22 x 1.5 M 22 x 1.5 alu wheels M 24 x 1.5	**350 Nm** (330 - 370 Nm) **480 Nm** (455 - 505 Nm) **630 Nm** (600 - 660 Nm) **630 Nm** (600 - 660 Nm) **860 Nm** (820 - 900 Nm)	

Tightening Torques for Caliper Bolts—Knorr Bremse (SB)

The correct tightening torques for the screw connections are:-

Tangential Screw Connections

M16 x 1.5 - tighten to **M = 320Nm** (300Nm - 350Nm) - (220 ft/lbs - 260 ft/lbs)

Axial Screw Connections

M16 x 1.5 - tighten to **M = 300Nm** (280Nm - 330Nm) - (210Nm ft/lbs - 245 ft/lbs)
M18 x 1.5 - tighten to **M = 420Nm** (400Nm - 460Nm) - (295 ft/lbs - 340 ft/lbs)

Tightening Torques for fitting Disc Rotor to Hub

Tighten to **M = 435Nm** (420Nm - 450Nm) - (310 ft/lbs - 330 ft/lbs)

Disc brake maintenance and visual inspection - SB Type Disc Brakes

2 Check brake pad thickness

- every 12 weeks (quarterly.)

The brake pad thickness must be checked regularly, e.g. during the tyre inflation pressure check. The intervals must not be more than 12 weeks.
The thickness of the remaining pad must not be less than 2mm (check with slide gauge).

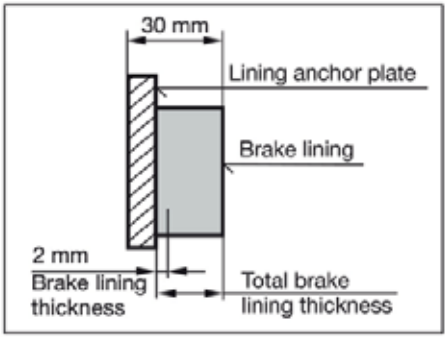

Open bearing
The thickness of the brake pad can be checked by the position of the brake caliper (1) in relation to the guide rod (2) (rough indication of wear).
If the end of the guide sleeve (3) is level with the fixed guide rod, the pad thickness must be checked again after the wheels have been removed.

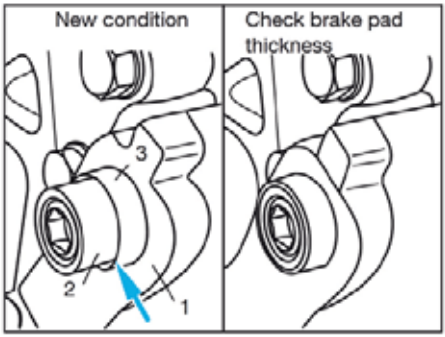

Sealed bearing
The sealed bearing has a ribbed rubber seal which is fitted over the guide pin. Pad wear should be checked when the wear mark (transition between the ribbed and smooth areas - see diagram) has moved to the end of the guide pin.

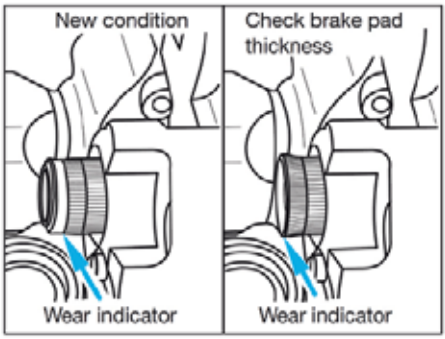

1 Visual Inspection

- every 26 weeks (twice annually).

Check all components for damage and wear.

3 Brake disc

Check the condition of the brake disc

- every 12 weeks (quarterly) under harsh conditions.
- every 26 weeks (twice annually) under normal conditions.

Sections A - D (see figure) show the possible conditions of the disc surface:

A:	Network-type tears	= permissible
B:	Radical cracks up to max. 1.5mm width and depth	= permissible
C:	Uneven disc surface less than 1.5mm	= permissible
D:	Continuous cracks	= not permissible

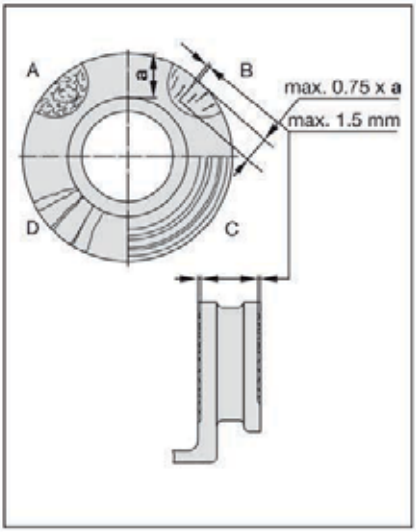

Technical details:

- disc thickness, new = 45mm
- minimum permissible disc thickness (check with a vernier gauge) = 37mm

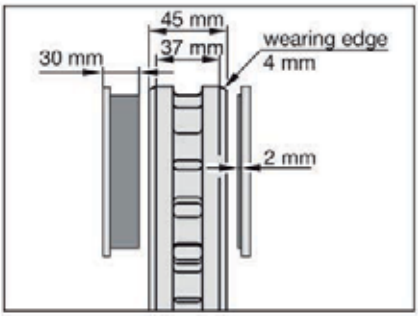

☞ In the case of surface conditions **A - C**, the brake disc can be used until the minimum permissible disc thickness has been reached.

IMPORTANT!
To prevent damage to the brake discs, the brake pads should be replaced when their thickness (excluding backing plate) is **2 mm** or less.

If this instruction is not adhered to, there is a danger that braking performance could be seriously reduced.

Disc brake maintenance and visual inspection - SB Type Disc Brakes

4 Check adjustment

- every 12 weeks (quarterly) under harsh conditions.
- every 26 weeks (twice annually) under highway conditions.

Prevent the vehicle from rolling away. Release the service brakes and the handbrake.

Remove cap.

Place an 8mm ring spanner on the hexagonal profile of the adjuster, or a 10mm spanner on the adjuster adapter. Turn anti-clockwise until the ratchet clicks 3 or 4 times.

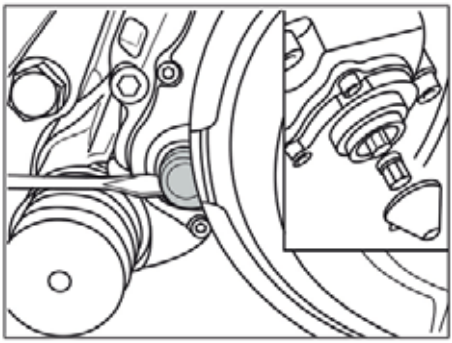

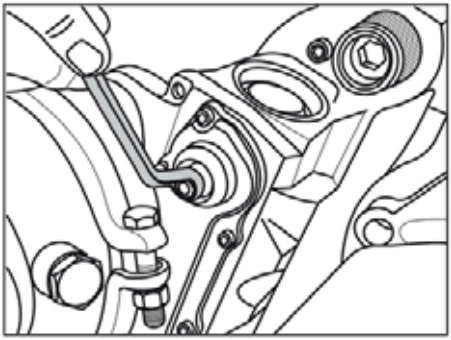

IMPORTANT!
If the version has an adjustment adapter, never turn without the adapter. Exceeding the specified break-off torque of the adapter will cause the adapter to break. Repeat with a new adapter. Fit a new brake caliper if the adapter shears off again - this is an indication of internal damage and the caliper should be replaced.

Do not use an open-ended spanner.
Max. torque: approx. **25 Nm (18 ft/lbs)**

Apply brake 5 to 10 times (approximately 2 bar). If the adjustment is correct, the ring spanner will turn back in a clockwise direction (make sure the ring spanner can rotate freely).

Note: As the cycle rate increases, the movement of the ring spanner, becomes smaller. If the ring spanner moves as described, the adjustment is OK.

Remove ring spanner.

Apply **Renolit HLT2** to the cap and re-fit.

For the version with the adapter, fit the lug on the cap pointing towards the axle beam.

If the following faults occur:

The adjuster or the ring spanner:

a) does not turn,

b) turns only upon initial application,

c) turns forward and back again upon each application,

the adjustment is not correct and the brake caliper must be replaced.

5 Check the brake caliper guide system

- every 12 weeks (quarterly) under harsh conditions.
- every 26 weeks (twice annually) under highway conditions.

Prevent the vehicle from rolling away. Release the service brakes and the handbrake.

Apply considerable pressure to the sliding caliper in the direction of the guide bearing. It should be possible to move it by about 0.5 to 1 mm (play).

Check the brake caliper guide if this is not the case.

The guide bush (1a) is sealed by the bellows (2) and the sheet metal cap (3) with the sealing ring (4).

Parts (2) and (3) must not be split or damaged in any way. Check for correct fitting.

If the version has a guide sleeve (5), check it for damage and to make sure it is correctly seated.

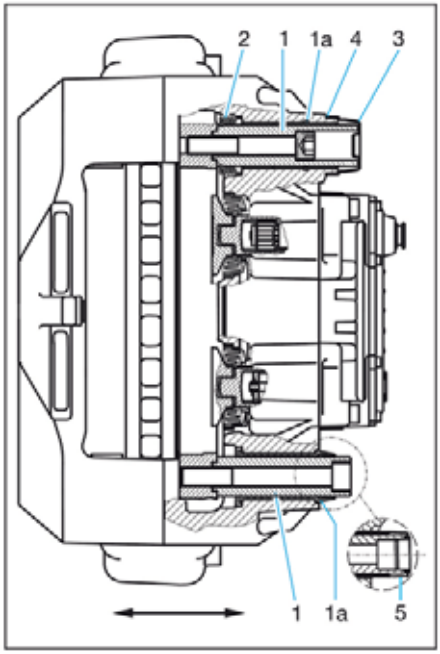

Disc brake maintenance and visual inspection - SB Type Disc Brakes

6 Check the bearing play

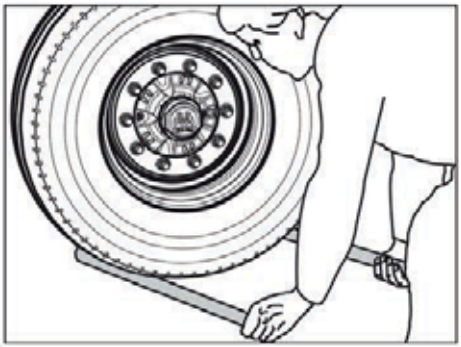

- every 26 weeks (twice annually).

Prevent the vehicle from rolling away.

In order to check the bearing play lift the axle until the wheels are off the ground.

Release the brake.

Apply a lever between the tyre and the ground and check the play.

The bearing play must be reset if the bearing play can be felt.

See instructions on setting bearings for ECO Plus, ECO Plus 3 and ECO, pages 16-17 and 18-19.

7 Check Bellows on the thrust tappets

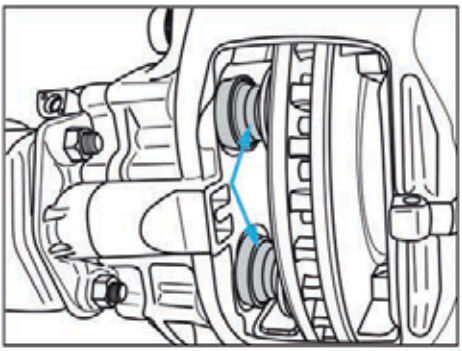

- every 26 weeks (twice annually).

Prevent the vehicle from rolling away.

Release the service brakes and the handbrake.

Remove the brake pads, if necessary.

The service brake and the spring-type actuator must be released.

Unscrew the thrust pieces using the adjuster far enough (max. 30 mm) until the bellows can clearly be seen.

The bellows on the tappets (arrow) must have no splits or damage.

Check for correct fitting.

Advice: Penetrating dirt and moisture cause corrosion and affect the operation of the clamping mechanism and adjustment.

If water has penetrated or rusting has been detected, replace the brake caliper.

8 Check the caliper

- every 26 weeks (twice annually).

If damage to the parts becomes visible on the thrust tappet when the bellows are checked, both bellows must be dismantled.

The parts which have been removed must be replaced by new ones.

Before the new parts are fitted check that the adjusting unit is free of corrosion and operates smoothly.

To check the parts, turn the threaded tubes (1) on the hexagon nut (size 8 or size 10 with an adapter) of the adjuster clock-wise onto the brake disc (2).

The threads of the threaded tubes (1) can be checked during the turning process for corrosion or damage.

If the threads are rusted or damaged, the brake caliper must be replaced.

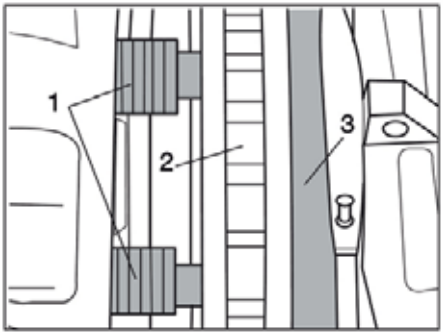

Advice:
To prevent the threaded tubes (1) from being turned completely out of the caliper, insert a new brake pad (3) into the caliper in the out-board brake pad position.

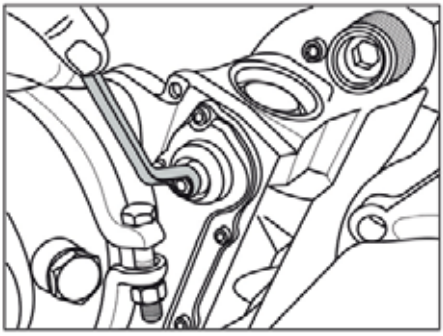

Advice:
To prevent the threaded tubes from being wound completely out of the caliper when working on a work bench, insert a separator (approximately 75 mm) between the tubes and the caliper housing.

If the threaded tubes are wound completely out of the caliper, the brake caliper must be re-placed.

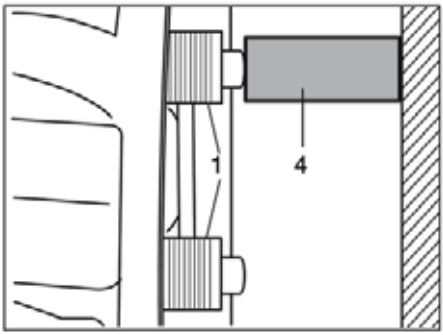

Airbag suspension maintenance and visual inspection

Visual inspection

- every 12 weeks (quarterly).

Check all airbag suspension component parts for damage or wear.

1 Check condition of airbags

- every 12 weeks (quarterly).

Check airbags for external damage (surface cracking, abrasion, crease formation, trapped foreign bodies etc.).

Replace airbags in the event of damage.

Safety notice
No welding should be carried out on steel parts of airbags and pressure vessel! The air suspension should only be filled with compressed air when mounted!

Danger of injury!

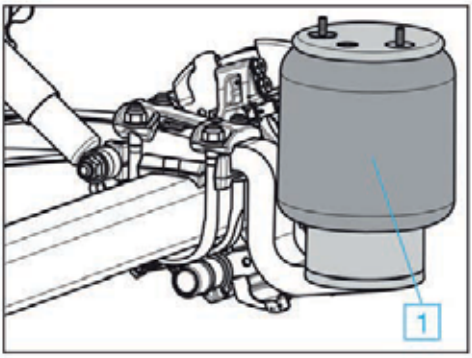

<u>If re-assembling the suspension please note:</u>

- All threads and nut washer interfaces (where applicable) must be lubricated with anti-seize prior to assembly.
- The spring eye bolt and shock absorber fasteners are to be tightened when the suspension is set at the correct ride height.
- U-bolt tightening procedure: nip up all the U-bolt nuts, then tighten the nuts to the prescribed torque in several stages on alternate sides (i.e. one U-bolt at a time).

2 Check airbag suspension piping circuit

- check at first service,
- thereafter every 26 weeks (twice annually).

Check air installation valves and line connections for firm seating, damage and seal tightness. Check valve linkage and fastenings arrows) for damage and tightness. The length of the valve lever and permissible angular positions for the valve linkage are shown in the illustration below.

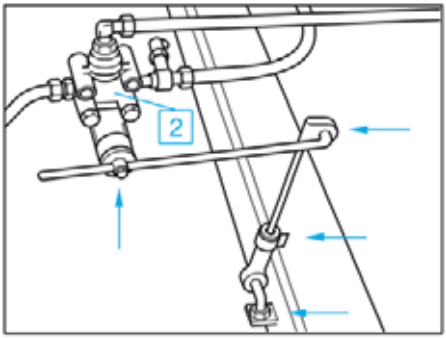

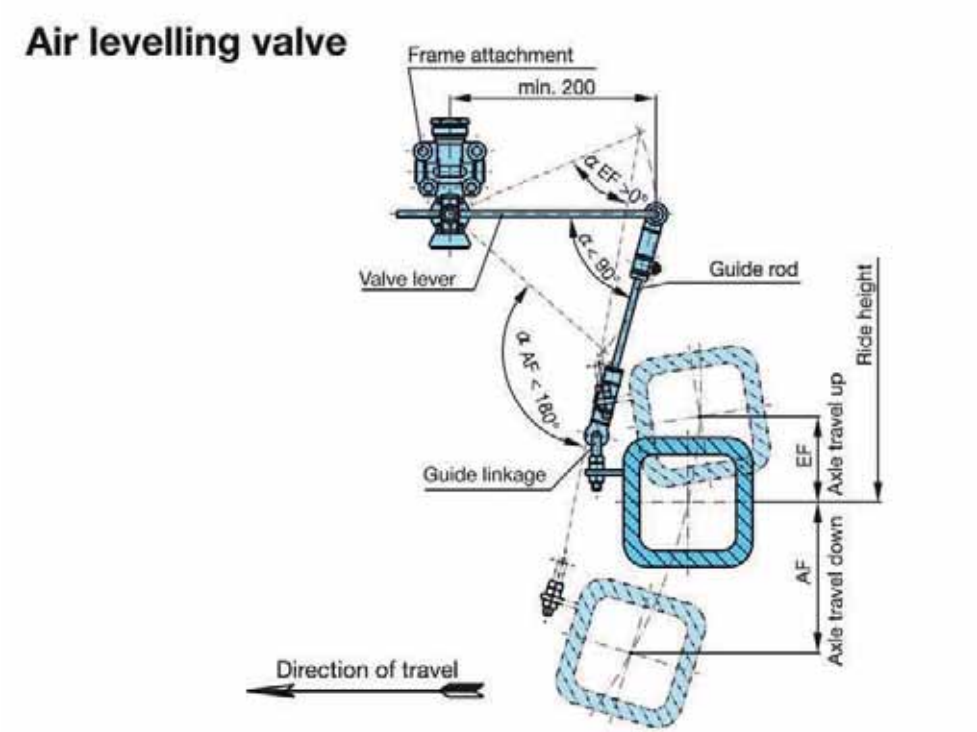

Airbag suspension maintenance and visual inspection

3 Shock absorber fastening

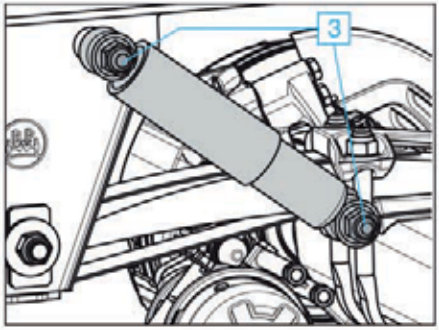

- tighten / re-torque at first service,
- thereafter annually.

Check lower and upper shock absorber fastening for tightness.

Tightening torques with a torque wrench:

M 24	**M = 425 Nm (315 ft/lbs)**
M 24 (alloy hanger)	**M = 325 Nm (240 ft/lbs)**

U-bolts

- tighten / re-torque at first service,
- thereafter annually.

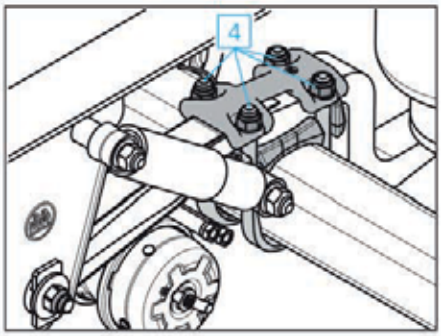

Check lock nuts of spring U-bolts for tightness. If loose, tighten nuts to the prescribed torque in several stages on alternate sides (i.e. one U-bolt at a time).

Tightening torques with a torque wrench:

M 24 (SW 36) **M = 650 Nm (480 ft/lbs)**

☞ **Note:**
No welding should be performed on the trailing arm spring!

Air bag fastenings

- tighten / re-torque at first service,
- thereafter annually.

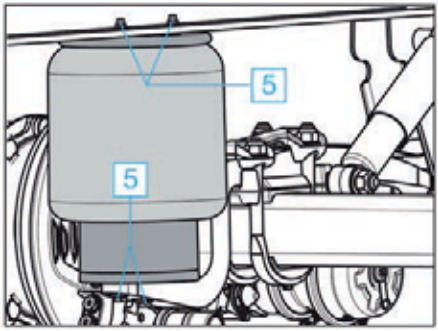

Check air bag fixing bolts or nuts for tightness and re-tighten if necessary.

Tightening torques with a torque wrench:

Upper mounting nuts -

M 12 **M = 66Nm (49 ft/lbs)**

Lower mounting screws-

M 16 **M = 230Nm (170 ft/lbs)**

6 Spring eye bolts

- tighten / re-torque at first service,
- thereafter annually.

Tightening torques with a torque wrench:

M 24 (SW 36) **M = 650 Nm (480 ft/lbs)**

M 30 (SW 46) **M = 1000 Nm (740 ft/lbs)**

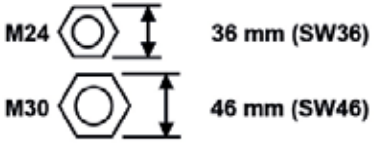

The serviceable life of the steel/rubber/steel (SRS) bush is dependent on the tightness of the inner steel bushing.

Check bushes - move vehicle backward and forward slightly with the brake applied, or move rolled spring ends with the aid of a lever. No play should be present in the rolled spring end when doing so. If the fastening is loose the spring eye bush and the spring eye bolt may be damaged.

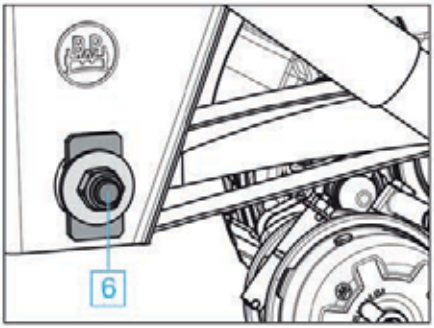

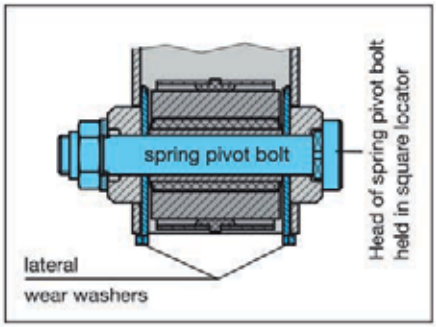

Fixed Arrangement

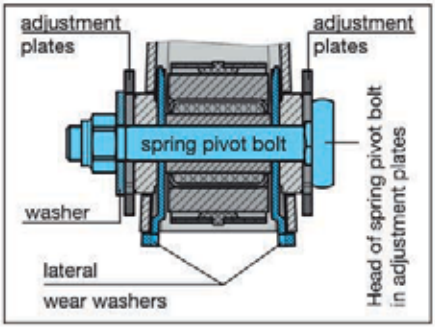

Alignable Arrangement

Airbag suspension maintenance and visual inspection

7 Spring eye bolt to gusset plate connection (only with optional BPW bolt-on hanger and gussets)

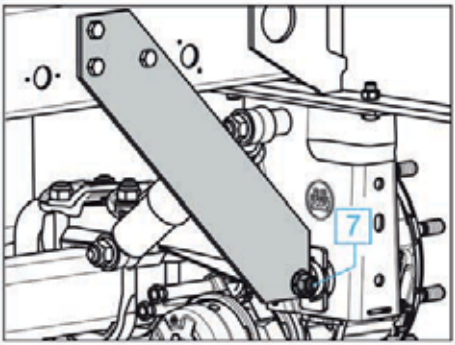

- tighten / re-torque at first service,
- thereafter annually.

Check the mounting bolts of the bolt-on gusset plates on the spring eye bolts are firmly tightened, and re-tighten with a torque wrench if necessary.

Tightening torques with a torque wrench:

M 18 M = 420 Nm (310 ft/lbs)

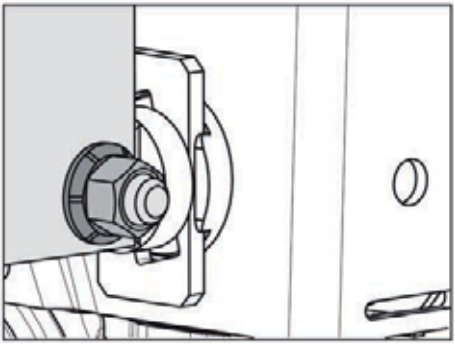

Installing or renewing the spring eye bolt with bolt-on gusset plates:

1. Unscrew or install the spring eye bolt.
2. Loosely pre-mount the gusset plate with at least three M 16 bolts at the top on the cross member and one M 18 bolt at the bottom on the spring eye bolt and tighten further until contact is made.
3. Set the track.
4. Tighten the spring eye bolt to the pre-scribed tightening torque.
5. Tighten the connecting bolt on the gusset plate spring eye bolt, then tighten the up-per connecting bolts to the prescribed tightening torques.

8 Axle lift

- tighten / re-torque at first service,
- thereafter annually.

Single-sided lift:
Check the M16 lock nuts on the lever arm fixing to make sure they are tight. Tighten with a torque wrench if necessary.

Tightening torques with a torque wrench:
M 16 M = 230 Nm (170 ft/lbs)

Check for wear on the bump stop on the lever arm (8). Make sure they are secure.

Tightening torques with a torque wrench:
M 10 M = 25 Nm (18 ft/lbs)
M 12 M = 66 Nm (49 ft/lbs)

Two-sided lift:
a) Check the M 16 lock nuts on the diaphragm cylinder (8a) to make sure they are tight.

Tightening torques with a torque wrench:
M 16 M = 195 Nm (145 ft/lbs)

b) Check the bump stop on the lever arm for wear, and that the M 6 attachment bolts are firmly tightened (8b).
c) Check that the attachment bolts of the front bracing strut (8c) of the mount on the air suspension hanger bracket are tight, and in the case of the bolt-on two-sided lift, the bolted connection on the air suspension hanger bracket.

Tightening torques with a torque wrench:
M 12 M = 75 Nm (55 ft/lbs)

d) In the case of the bolt-on two-sided lift, check that the locknuts on the 24 mm hexagon bolts (8d) for attaching the lever to the bracket (mount) are tight.

Tightening torques with a torque wrench:
M 12 M = 120 Nm (90 ft/lbs)

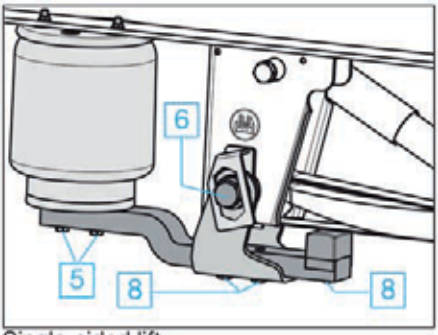

Single-sided lift

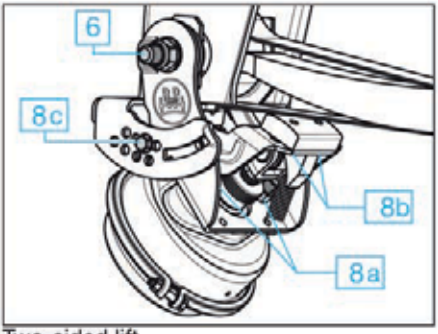

Two-sided lift

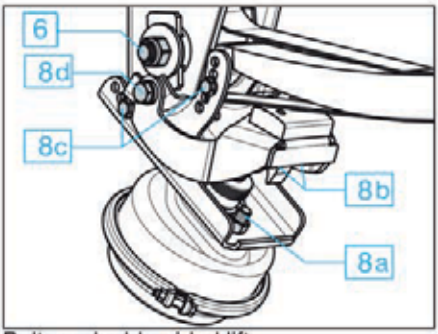

Bolt-on double-sided lift

Airbag suspension maintenance and visual inspection

Spring pivot bolt bearing with axle lift

Single-sided lift

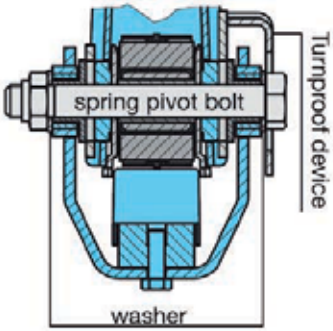

Two-sided lift

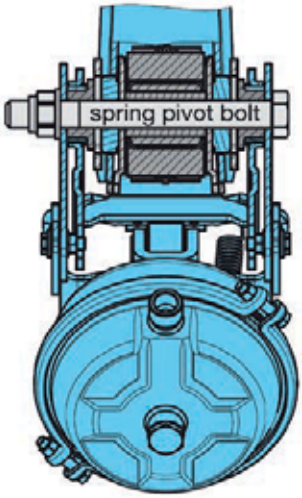

Bolt-on double-sided lift

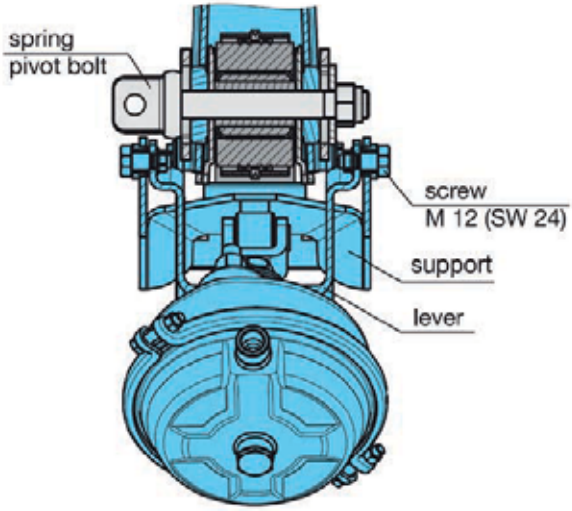

9 **Bolt-on hanger mounting bolts on frame** (only with optional BPW bolt-on hanger and gussets)

- tighten / re-torque at first service,
- thereafter annually.

Check that the mounting bolts of the air suspension bolt-on hanger bracket on the longitudinal member are firmly tightened.

Tightening torques with a torque wrench:

M 16 **M = 260 Nm (195 ft/lbs)**

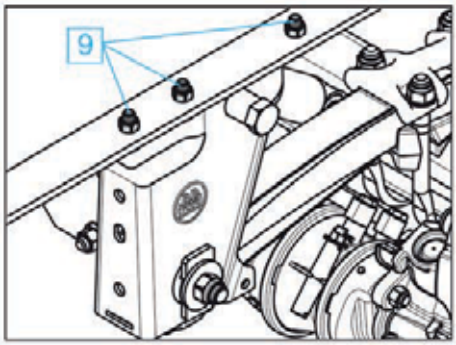

10 **Catch straps**

- every 26 weeks (twice annually).

Examine catch straps and attachment.

Replace if necessary

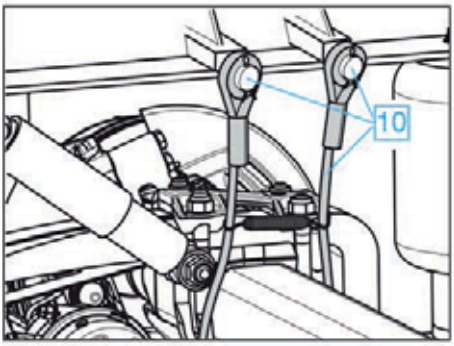

BPW Axle Lift Systems

General

The BPW Airbag suspension can also be fitted with an optional axle lift system. This system automatically lifts or lowers an axle or axles depending on the load on the vehicle.

BPW lift axle systems are supplied with either fully automatic pneumatic control or EBS control.

Both systems have an 'off' switch which is contained in a locked box mounted on the trailer. This switch deactivates the system so that the lift axles stay in the down position.

These systems allow one axle of a tandem group or one or two axles of a tridem or quad group to be lifted. The axle lift can also be used in conjunction with an LL self steering axle on a tridem or quad suspension.

All BPW axle lift systems must be set to comply with current ADR requirements and lift and lower the axles at the legally prescribed loads.

The reliable functioning of the axle lift system and its activation times rely on the correct maintenance of the airbag suspension and the correct setting of the airbag suspension ride height. For maintenance of the airbag suspension see pages 54 - 58.

For correct suspension ride height refer to the appropriate suspension specification.

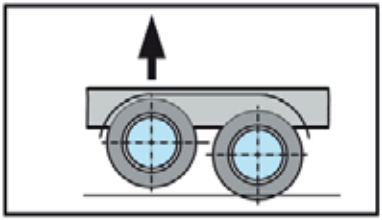

Tandem with single lift

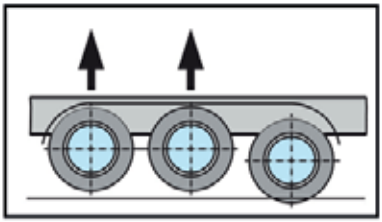

Tridem with dual lift (front and centre)

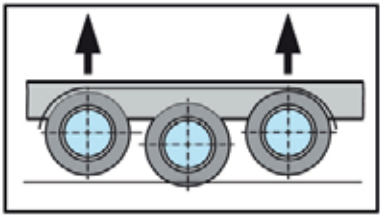

Tridem with dual lift (front and rear)

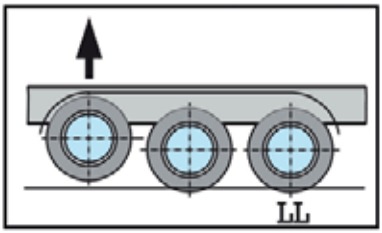

Tridem with axle lift and self-steer axle

Fully Automatic Pneumatic System

Operating on a purely pneumatic basis the compact axle lift valve reads the pressures inside the airbags. Once this pressure drops below a certain preset level as the load lightens (during unloading), the axle or axles lift automatically. The reverse happens when the vehicle is loaded - once the pressure rises above a certain preset level the axle or axles drop once again.

EBS Controlled System

When fitted to a trailer with BPW EBS the lift axle or axles are controlled by the EBS and again must be set to lift and lower automatically at the legally prescribed loads provided that the EBS is powered up.

Centre / Side Axle Lift

The centre axle lift system is suitable for raising the front, middle or rear axle of a suspension unit, while the side axle lift is suitable for lifting the front axle of a suspension unit.

The centre / side axle lift system utilises a sepa-rate air bag to generate a force to lift the axle. The air pressure to the lift bag is regulated to pre-vent damage to the lift mechanism.

For complete maintenance details of the centre / side axle lift see pages 59 - 61.

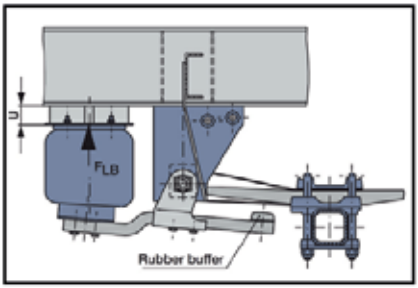

Side Axle Lift

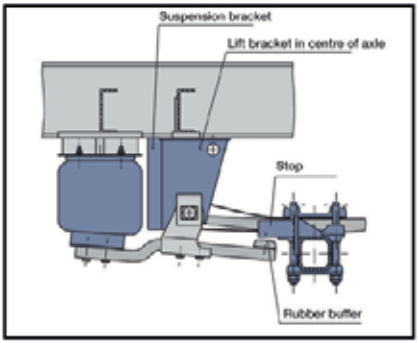

Centre Axle Lift

Two-sided Axle Lift

For Highway Series Suspensions only.

Can be used on all axles, the space in front of the air suspension hanger brackets and in the vehicle centre remains free.

The two-sided axle lift utilises two type 40 or 44 boosters, bolted to the airbag suspension hanger brackets to lift the axle.

The air pressure to the boosters must be at least 6 bar for correct functioning of the axle lift system.

For complete maintenance details of the two-sided axle lift see pages 59 - 61.

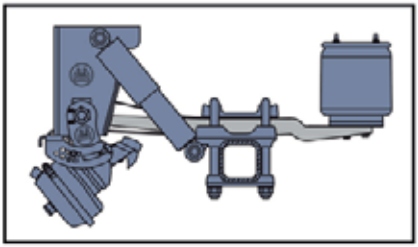

Two-sided Axle Lift

Airbag suspension - Raise and Lower Valve

Raise/Lower Valve (if fitted)

The optional raise/lower valve is used to manually alter the height of the trailer when it is stationary to facilitate easier loading and unloading of the vehicle.

Manual Raise/Lower Valve

Prior to operating the raise/lower valve, ensure that the air suspension is fully charged with air via the prime mover.

To raise vehicle, depress raise/lower valve handle and turn clockwise to position I (raise). When vehicle reaches the desired height, turn handle back to position II (stop).

To lower the vehicle, depress the raise/lower valve handle and turn clockwise to position V (lower). When vehicle has reached the desired height, turn the handle back to position IV (stop).

☞ For vehicles with manually operated raise/lower systems the valve lever must be returned to position III (travel) before the vehicle drives off. Failure to do so may result in damage to the airbag suspension.

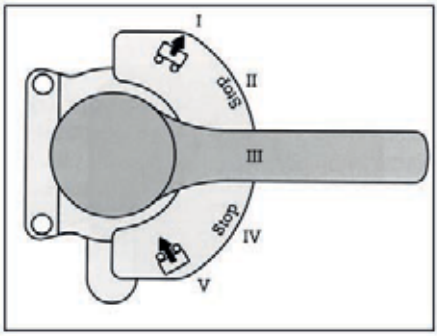

Raise/Lower Valve Positions:

I - Raise trailer height.

II - Hold at new raised height.
III - Travel position

IV - Hold at new lowered height
V - Lower trailer height

Manual Raise/Lower Valve

Reset to Ride (RTR)

The optional raise/lower valve can be specified with a reset to ride (RTR) function. The purpose of the raise/lower valve is to manually alter the height of the trailer when it is stationary to facilitate easier loading and unloading of the vehicle.

RTR Raise/Lower Valve

For vehicles fitted with EBS:

The valve incorporates a ‘dead man function’. Depress the valve lever and turn in the desired direction. When vehicle attains the correct height the valve lever is simply released. The valve maintains the selected trailer height.

When the vehicle drives away the EBS system automatically disengages the valve once the vehicle exceeds 6 km/h. The vehicle then returns to the correct ride height.

For vehicles without EBS:

Utilising the same ’dead man function’ valve as described above, vehicles without EBS use a signal from the brake lights to disengage the valve.

Depress the valve lever and turn in the desired direction. When vehicle attains the correct height the valve lever is simply released. The valve maintains the selected trailer height.

The valve disengages when the brakes are applied for the first time. The vehicle then automatically returns to the correct ride height.

The valve can also be manually reset to ride by pulling out the handle.

BPW Self Steering Axles - LL

General

BPW self steering axles are designed to reduce the lateral tyre wear forces on the axles of the trailer while cornering, thus reducing tyre wear, lowering fuel consumption and improving maneuverability.

While driving straight ahead the weight of the vehicle causes the undulations in the pressure washers in the kingpin housing to keep the wheels on track. The wheels remain stable in the correct straight ahead position. When the semi-trailer follows the prime mover unit into a curve, the wheel caster action ensures that the wheels turn in accordance with the curve radius (the thrust washers slide over one another). The frictional resistance therefore changes according to the load on the axle.

Operation

While driving forward a steering angle of between 8° and 27° (depending on axle type) can be achieved depending on the load.

Reversing

The link connecting the wheels uses a steering lock to prevent the wheels from steering when the vehicle is reversing. This pneumatic lock is activated by a manual valve on the trailer or by a solenoid activated via the reverse lights when putting the towing vehicle into reverse.

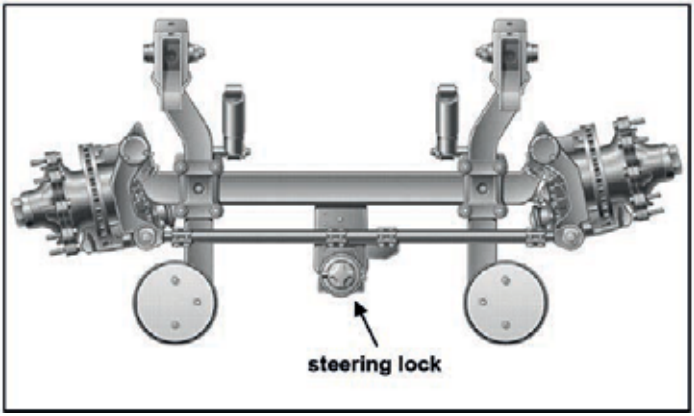

Service and Inspection

- The BPW LL self steering axle utilises standard BPW hub units, braking systems and airbag suspensions - see other sections of this book for the relevant maintenance instructions for hub units, braking systems and airbag suspensions.
- Ensure that the kingpins are properly greased at all times (see page 14 for greasing instructions). For the kingpins the use of a high pressure central lubrication system which is capable of feeding special longlife grease of viscosity class 2-3 is permitted. The use of liquid lubricants is not permitted!

Steering Axle wear measurements.

BPW self steering axles have two wear measurements for the kingpins:

Vertical Movement

During the steering operation the stub axle moves up and down as the stub axle rotates on the kingpin and undulating washers.

The undulating washers, when new, have a total thickness measurement of **25 mm** and can wear **3 mm** before requiring replacement.

This equates to a vertical movement from **9 mm** when new to **12 mm** when worn.

Horizontal Movement.

The maximum amount of bush wear allowed is **1 mm.**

The movement is measured by attaching a dial indicator to the axle beam and measuring the sideways movement of the stub axle eye.

Note: Prior to checking this measurement the wheel bearings must be adjusted correctly.

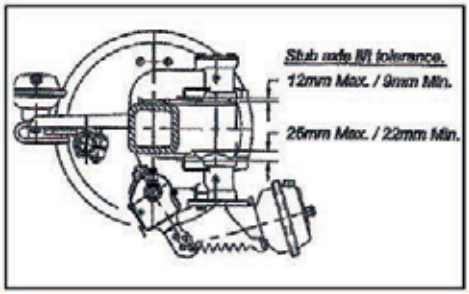

Maximum Vertical Movement - **3 mm**

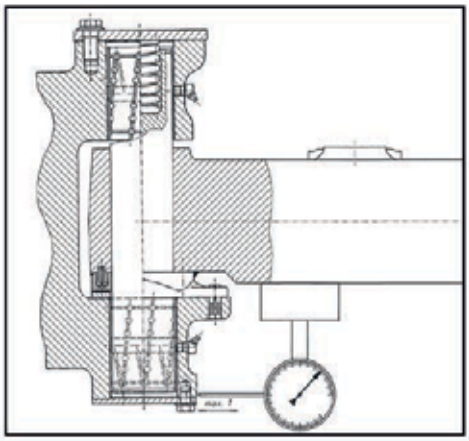

Maximum Horizontal Movement - **1 mm**

Fitting and setting automatic slack adjusters - Eco-Master

The BPW Eco-Master Automatic Slack Adjuster has been designed and manufactured by BPW to suit the BPW drum brake.

The BPW Eco-Master requires accurate adjustment both initially and after each lining change to ensure that the free play on the brakes is correct. Once this setting is correct the Eco-Master will faithfully maintain the correct setting, adjusting itself when necessary, to give the very best in lining life and safe operation. The automatic slack adjuster for the drum brake axle - the BPW Eco-Master - cannot both set and adjust itself, it will always automatically adjust back to it’s initial setting, which must be done manually.

Every time the brakes on the trailer are used a little bit of both the brake lining and the brake drum are worn away. So the next time the brake booster must push the slack adjuster a little further to achieve the same braking result. The Eco-Master automatically re-adjusts itself every time the camshaft rotation exceeds 17.5°, maintaining the optimum free play between the linings and the brake drum.

If the initial setting of the Eco-Master is done correctly then the automatic slack adjuster will maintain the correct setting for the life of the linings.

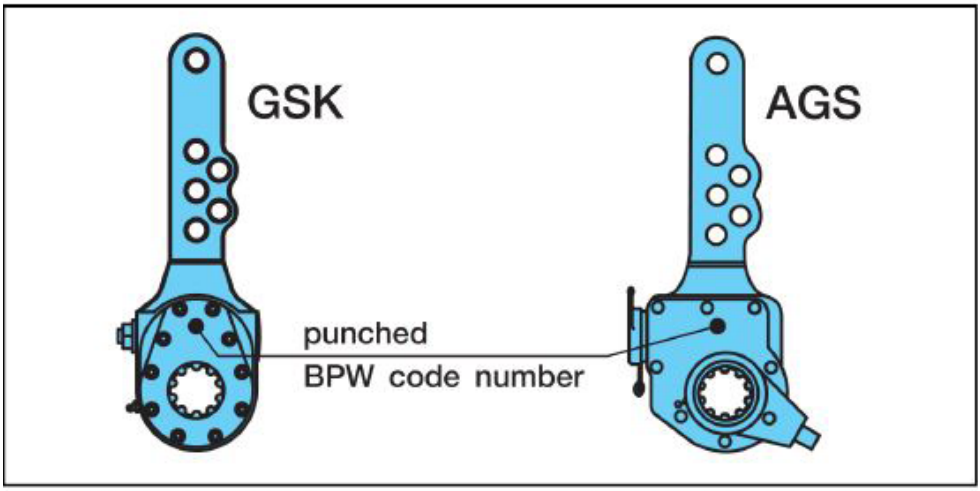

Manual Slack Adjuster

Automatic Slack Adjuster Eco-Master

1 If the BPW Eco-Master automatic slack adjusters are not already fitted to the axle, fit the slack adjusters and clamping components to the camshaft in the sequence shown.

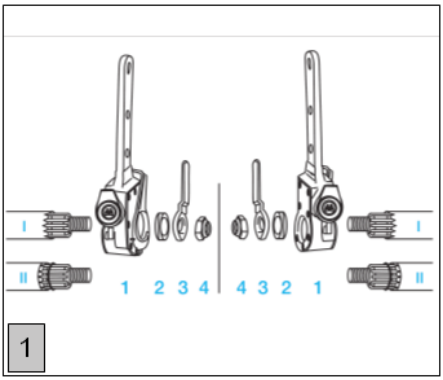

2 If the BPW Eco-Master automatic slack adjusters are not already fitted to the axle tighten the slack adjuster retaining nut to **80 - 90 Nm**, ensuring that the brake lining wear indicator is pointing vertically up!

M22x1,5 M = 80 - 90 Nm (60 - 66 ft/lbs)

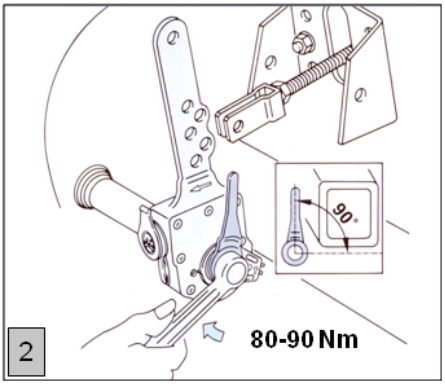

3 If the BPW Eco-Master automatic slack adjusters are not already fitted to the axle, fit the anchor brackets and leave the nuts loose at this stage.

If already fitted, loosen these mounting nuts.

Open the sealing cap.

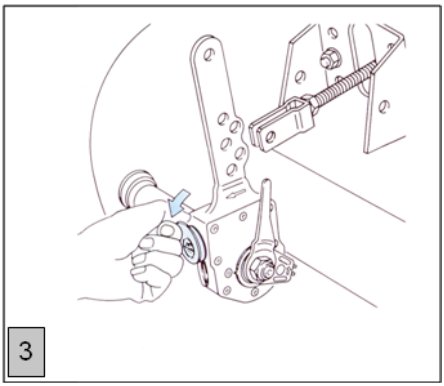

Fitting and setting automatic slack adjusters - ECO-Master

4 Depress the clutch sleeve around the adjustment screw with a 19 mm ring spanner.

Turn the adjusting screw to line up the clevis pin to the relevant slack adjuster hole. Ensure that the pushrod has been cut to the correct length.

The booster pushrod must be in the “brakes released” position.

The pushrod and the slack adjuster must not be pulled or pushed to line up the clevis pin hole to the slack adjuster hole.

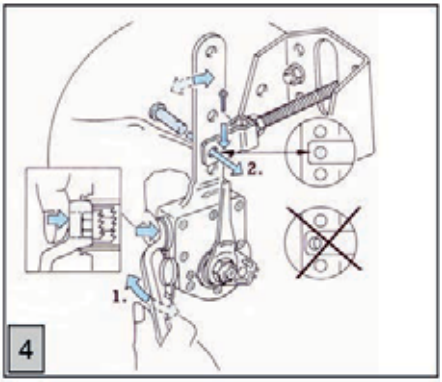

5 Important - fit return spring to the slack adjuster (1), then while depressing the clutch sleeve (2) rotate the location bracket (3) until the pointer aligns with the dowel on the body of the slack adjuster.

The booster must be in the “brakes released” position.

If the anchor bracket does not allow the alignment of the location bracket as shown, then the anchor bracket will need to be repositioned.

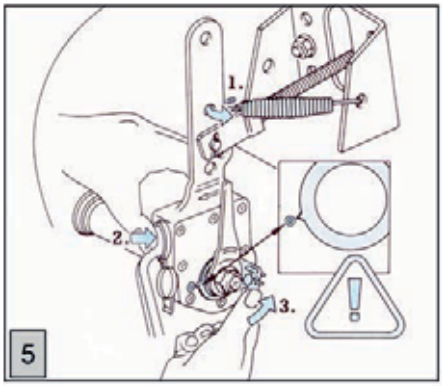

6 Tighten the anchor bracket fixing bolts to 25 Nm, ensuring that the pointer remains aligned with the dowel on the slack adjuster.

The booster must be in the “brakes released” position.

M8 M = 25 Nm (18 ft/lbs)

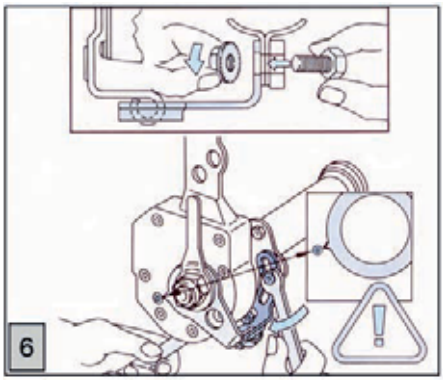

7 Adjust the brakes in the normal manner by depressing the clutch sleeve with a 19 mm ring spanner.

Ensure that the free play obtained, “a” is 10% to 15% of the connected brake lever length, “b”. E.g. if brake lever length = 150 mm, then set the free play = 15-22 mm.

The booster must be in the “brakes released” position.

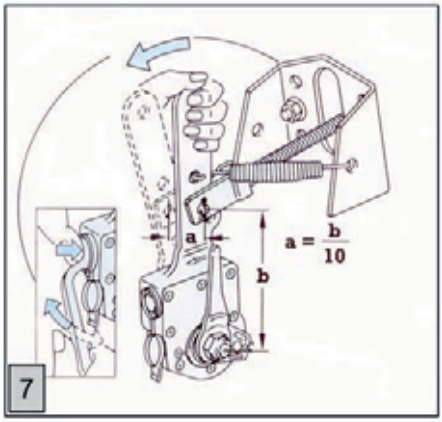

8 Refit the sealing cap

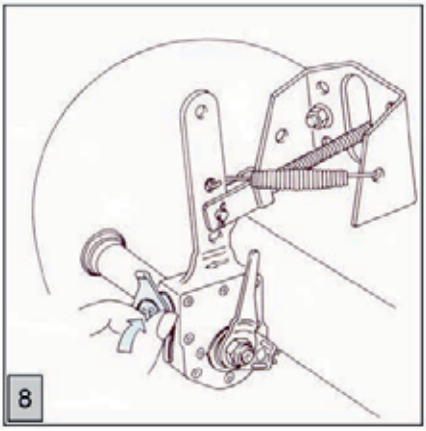

Note: It is recommended that the operation of the auto slack adjuster be checked every 12 weeks (quarterly). Refer page 25 for the automatic slack adjuster checking procedure.

Fitting and Setting Digital Hubodometers

A minicomputer that is protected from water and dirt counts the wheel revolutions using a magnet and a reed contact. The digital ECOMETER with the special clasp locking ring and integrated magnet is avail-able for all ECO Plus Hub Unit axles. The tyre rolling circumference is set initially and can-not be changed subsequently.
Readout takes place when the two silver contacts on the older style ECOMETER or the two BPW logos on the face of the newer style ECOMETER are shorted out with a metallic object, e.g. a spanner.

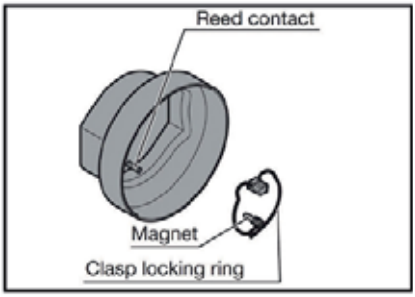

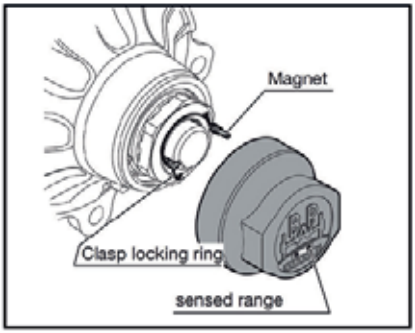

Start-up / Setting the tyre rolling circumference
On delivery the digital ECOMETER is in test mode. The ECOMETER does not change over to normal counting mode until the tyre rolling circumference has been entered. The setting cannot be changed subsequently. Even the preset tyre rolling circumference of 3248 mm (for tyre size 385/65 R22.5) must be confirmed as described in point 3, prior to start-up. For list of tyre rolling circumferences see page 64.

Setting the tyre rolling circumference
The unit is changed to setting mode by shorting out the silver service contacts or the BPW logos on the face of the ECOMETER, while at the same time touching the reed contact with the magnet.

The display “9-U3248” appears for about 10 seconds as identification of setting mode.

1. Pass the magnet over the reed contact, the flashing digit can be incremented by one every time the service contacts are shorted (after reaching 9, the digit reverts to 0).
2. Pass the magnet over the reed contact again, the next digit flashes. Set the digit using the service contacts. In this way, change the number “3248” to the appropriate tyre rolling circumference.
3. The setting mode is exited by changing the first digit from 9 to 0. When the nine is flashing it can be reduced from 9 to 0 by shorting the service contacts.

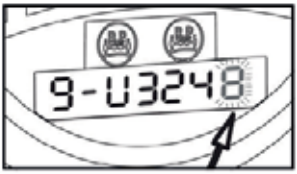

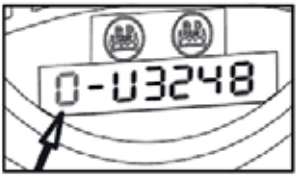

Installation

Remove the hub cap and hooked spring ring. Install the hooked spring ring with magnet and ECOMETER.

Important!
The ECOMETER must be fitted and dismantled using only torque controlled (not impact!) air guns or manually with a hand wrench.

Tightening torques

ECOMETER **M = 800 Nm (590 ft/lbs)**

Important!
Please protect the reed contact in the cap against damage. Do not stack caps one inside the other, for example, Always hook in the safety lock on the hooked spring ring (arrow)! Caution, do not bend the magnet with the spring when installing and removing.

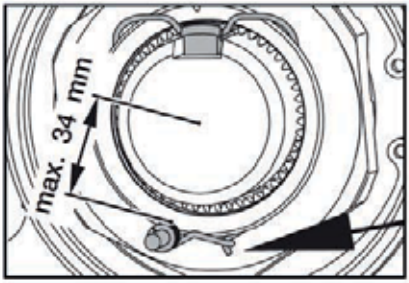

Ensure that the distance between the centre of the axle beam and the inner edge of the magnet does not exceed 34 mm.

Reading Out

On the older style ECOMETER short out the two silver service contacts with a metallic object e.g. a spanner. On the newer style short out the two BPW logos on the face of the ECOMETER with a metallic object. The set tyre rolling circumference “-U3248” in mm appears for about 1 second, followed by the mileage (value in kilometres) for about 6 seconds, e.g. “000567.3”. If this readout mode is called up 10 times in quick succession, the display function is deactivated and can only be reactivated again after driving for about 100 m.

New style BPW ECOMETER

Battery

A row of flashing dots appears on the display when the battery voltage has fallen below the necessary value. The battery should be changed. After the battery has been changed, the program and display are resumed (the distance value in kilomtres continues to be stored in temporary memory).
The battery is available from BPW, code number 02.0130.97.00.

Tyre rolling circumferences for digital ECOMETER hubodometer

The following tyre rolling circumferences are based according to standard ETRTO.
Data of various tyre manufacturers can slightly deviate.

Tyre size	Tyre rolling circumference ± 2 %
245/70 R 19,5	2559 mm
265/70 R 19,5	2644 mm
285/70 R 19,5	2730 mm
385/55 R 19,5	2785 mm
425/55 R 19,5	2937 mm
435/50 R 19,5	2840 mm
445/45 R 19,5	2730 mm
445/65 R 19,5	3251 mm
10.0 R 20	3209 mm
11 R 22,5	3203 mm
12 R 22,5	3306 mm
275/70 R 22,5	2922 mm
315/60 R 22,5	2879 mm
315/80 R 22,5	3282 mm
385/55 R 22,5	3018 mm
385/65 R 22,5	3248 mm
425/65 R 22,5	3406 mm
445/65 R 22,5	3485 mm
455/40 R 22,5	2850 mm

BPW Turntables (Ball Races)

Service and maintenance

- When new, the turntables are only slightly greased. Before their initial use they have to be filled with **BPW special long life grease ECO-Li Plus**.
- The turntable bearing is to be lubricated via the grease nipples with **BPW special long life grease ECO-Li Plus** after every 25,000 km or at least after every three months. Under extreme conditions lubricate more frequently. Ensure that the same type of grease is used each time.
- All bolted fastenings must be checked at regular intervals for tightness and tightened if necessary.

Inspection procedure for BPW turntables

Park unladen vehicle on flat ground.

- Testing for radial (fore and aft) play - apply the trailer brakes and drive the prime mover back and forth. Measure total movement (play) at upper ring relative to lower ring. Movement may not exceed 2.0 mm.
- Testing for axial (vertical) play - with the truck and trailer brakes off, place an appropriate lever between the prime mover chassis rail and the top flange of the ball race at both left and right hand sides. Using the lever arm, attempt to lift the ball race up off the chassis rails and measure any upward movement. This play may not exceed 3.0 mm.
- The turntable must be replaced when the wear limits are reached.

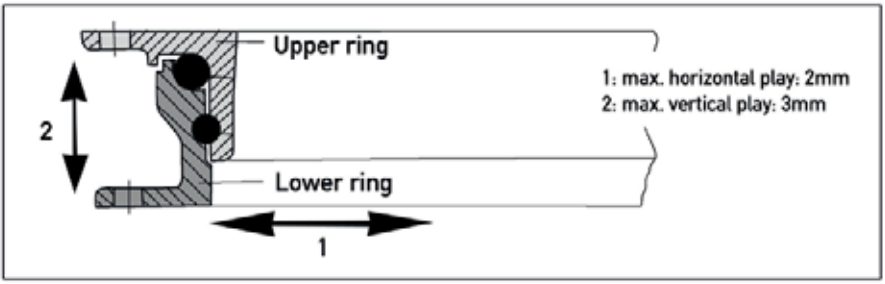

The use of a high pressure central lubrication system which is capable of feeding special longlife grease of viscosity class 2-3 is permitted.

The use of liquid lubricants is not permitted!

Conventional Hub Unit - Lubrication

Change wheel hub bearing grease

- every 1 to 3 years or 250,000 km to 500,000 km depending on conditions.

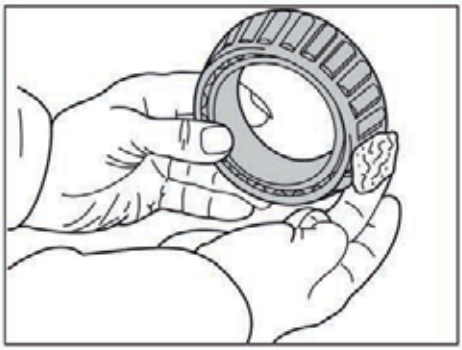

Mark demounted wheel hubs and bearing races so that their identity is not mistaken during re-assembly.

Clean wheel hubs thoroughly inside and outside.

Clean taper bearings thoroughly, dry and check for re-useability.

Replace seals if necessary.

Work **BPW special longlife grease ECO-Li** Plus thoroughly into the cavities be-tween the taper rollers and the cage in both taper roller bearings. (For grease quantity see il-lustration on page 77). Smear any residual grease into the hub's outer bearing race.

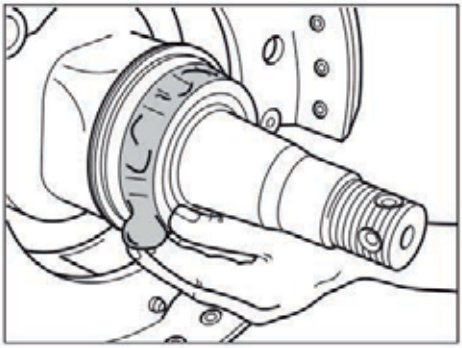

Fit wheel hubs and adjust bearing play as per pages 78 - 79.

Fill hub caps with **BPW special longlife grease ECO-Li** Plus and screw on.

Note: There are differences in the specifications for the maintenance and lubrication of the ECO Plus, Eco and Conventional Hub Units. Please refer pages 80 - 81 to correct-ly identify the hub unit.

Grease filling per wheel hub - Conventional wheel hub bearing

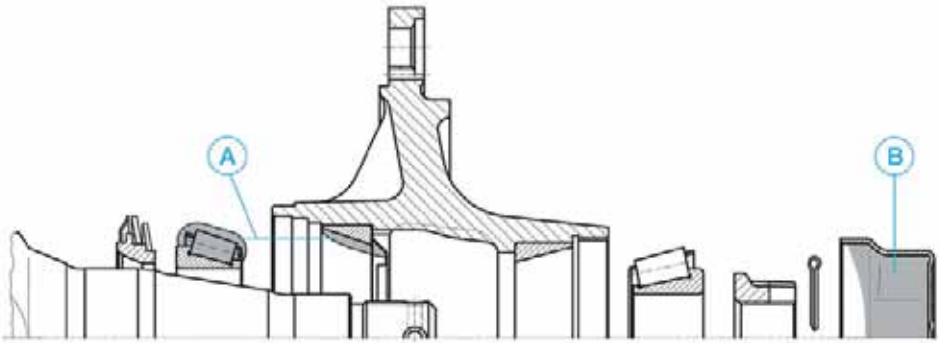

	BPW special longlife grease ECO-Li^{Plus} Grease quantity per taper roller bearing	
Axle load (Series H, K, N, M)	Ⓐ inner bearing	Ⓑ outer bearing (cap filling)
4000 - 5500 kg	80 g	130 g
6000 - 9000 kg	170 g	290 g
10000 - 12000 kg	180 g	320 g
13000 - 14000 kg	240 g	500 g
16000 - 18000 kg	400 g	800 g
20000 kg	440 g	900 g
Axle load (Series E and NE)		
3000 kg	70 g	100 g
3500 - 3800 kg	80 g	120 g
4500 kg	90 g	180 g

Conventional Hub Unit - Maintenance

Check bearing play and adjust if necessary

- at first service,
- thereafter every 26 weeks (twice annually).

Prevent vehicle from rolling away.

In order to check the bearing play of the Conventional Hub Unit, lift the axle until the wheels are off the ground. Release the brake. Apply a lever between the tyre and the ground and check the play.

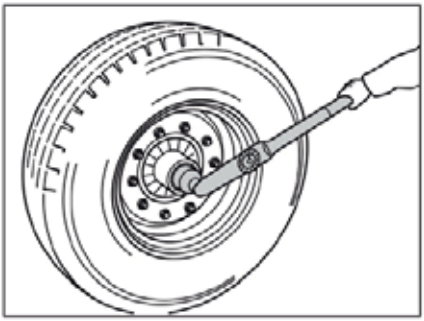

If bearing play is detected on the Conventional Hub Unit:

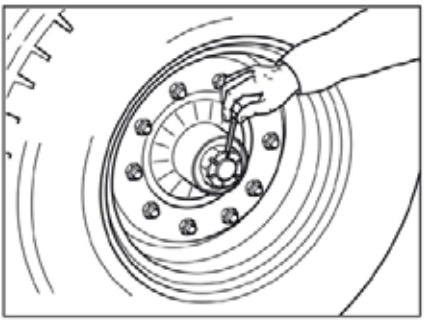

Adjust bearing play - Conventional Hub Unit

1. Unscrew the hubcap.
2. Remove the split pin from the axle nut.
3. Tighten using a torque wrench whilst simultaneously turning the wheel. To achieve correct bearing adjustment the Conventional Hub Unit must complete several revolutions before the torque wrench "clicks", then back off the axle nut as per item 4.

Tightening torques:

axle load up to 5,5 tons	**= 100 Nm (75 ft/lbs)**
axle load from 6 to 14 tons	**= 150 Nm (110 ft/lbs)**
axle load from 16 to 30 tons	**= 350 Nm(260 ft/lbs)**

4. Back off the axle nut to the next available split pin hole. Should they already be in line back the axle nut off to the next hole - do not back off more than 30°.
5. Insert the split pin and bend upwards slightly.
6. Refill the hub cap with **BPW special Plus longlife grease ECO-Li** Plus and screw on. Tighten hub caps to torque as shown on page 79.

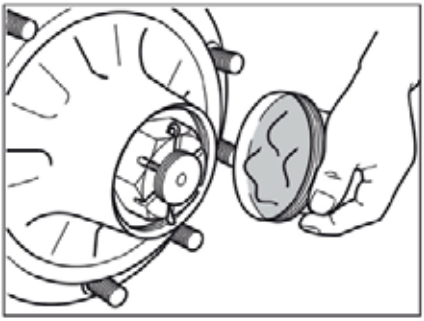

Check hub caps for firm seating

- every 26 weeks (twice annually).

Check hub caps for tightness using a torque wrench.

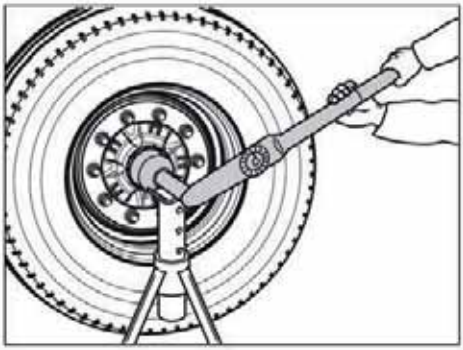

Tightening torques:

Hub Cap for Conventional Hub Unit:

Steel cap 6 - 12 t **= 500 Nm (370 ft/lbs**

Steel cap 13 - 20 t **= 700 Nm (520 ft/lbs**

Alloy cap 6 - 12 t **= 350 Nm (260 ft/lbs)**

In an emergency the hub caps can be tightened using a normal cap spanner from the vehicle tool kit. Strike the latter with a hammer, or also with a piece of tubing placed over the wheel stud.

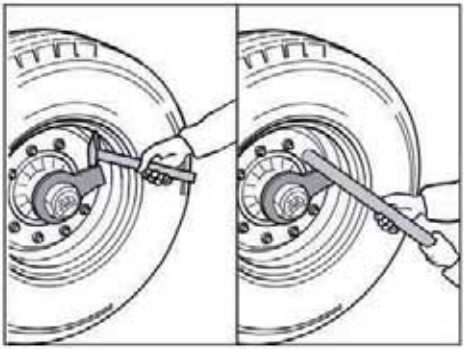

Tighten to the correct tightening torque with a torque wrench as soon as possible.

Caps with integrated hub odometers must be fitted and dismantled using only torque controlled (not impact) air guns or manually with a hand wrench.

Note: There are differences in the specifications for the maintenance and lubrication of the ECO Plus, Eco and Conventional Hub Units. Please refer pages 80 - 81 to correctly identify the hub unit.

BPW - Hub Unit Identification

The BPW hub unit type can be identified by the appearance and size of the hub cap.

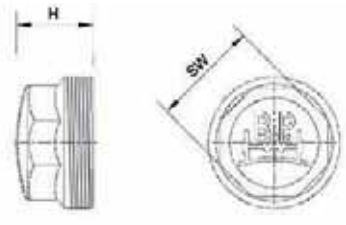

Conventional Hub

Until 1982

- EH Series (Old Generation)
- Octagon cap
- Outer thread

Hubcap Part No.	**Description**	**H**	**SW**	**Thread** (external)
0321223020	EH 8	71	95	M115 x 3
0321224020	EH 10	82	110	M125 x 3

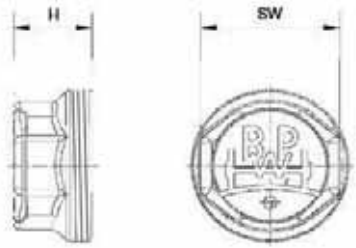

Conventional Hub

From 1982

- H/R Series (New Generation)
- Oval cap
- Outer thread

Hubcap Part No.	**Description**	**H**	**SW**	**Thread** (external)
0321223090	9 tonne	62	95	M115 x 2
0321224070	10/12 tonne	82	110	M125 x 2

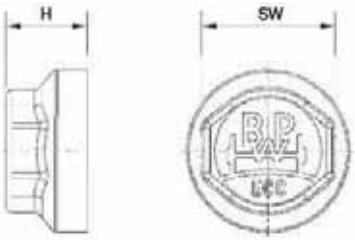

Eco Hub

From 1992

- H Series
- Oval cap
- Inner thread

Hubcap Part No.	**Description**	**H**	**SW**	**Thread** (internal)
0321224250	9 tonne	61	110	M125 x 2
0321225080	10/12 tonne	70	110	M135 x 2

BPW - Hub Unit Identification

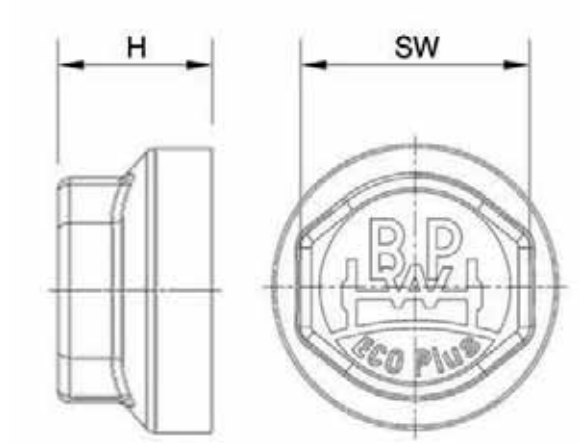

ECO Plus Hub

From 2000

- H Series
- Oval Caps
- Inner thread

Hubcap Part No.	**Description**	**H**	**SW**	**Thread** (internal)
0321225310	Standard	70	110	M136 x 2.5

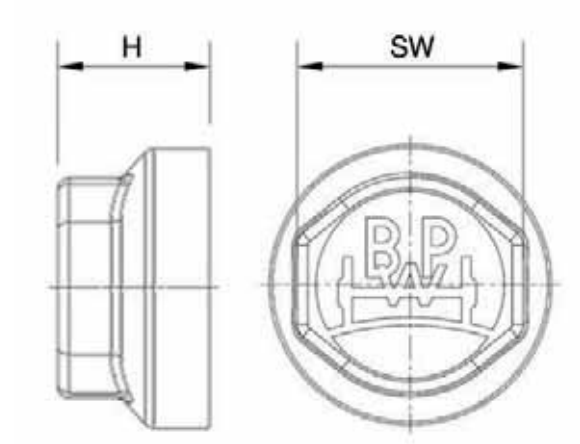

ECO 3 Plus Hub

From 2018

- H Series
- Oval Caps
- Inner thread

Hubcap Part No.	**Description**	**H**	**SW**	**Thread** (internal)
03.212.29.06.0	Standard	70	110	M135 x 2

Transpec Multivolt Trailer EBS

Concept

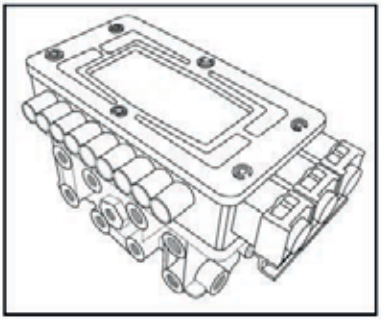

Transpec Multivolt EBS Valve

The **Transpec Multivolt Control Module** is a remote mounted “twin-piston” 6-port relay valve, which can be activated with a pneumatic signal to deliver air from reservoirs on the trailer to the brake boosters fitted to the axles. The Transpec Multivolt EBS module also has solenoids attached to the internal pis-tons, so that the air supply to the brake boosters can be activated and released electrically as well. The Transpec Multivolt EBS module has an internal ECU (computer), which controls the solenoids, based on the inputs from various sensors in the module, such as internal pressure transducers and an internal accelerometer, that measures the lateral acceleration to sense Transpec Multvolt EBS Valve how hard the vehicle is being driven around a corner. This valve is also connected to ABS pole rings and sensors on one or two axles. When coupled to an EBS truck, the Transpec Multivolt Control Module can also accept electronic signals from the truck to apply and release the trailer brakes.

Electronic Control Signal

When connected to an EBS prime mover, to apply the brakes an electronic signal is transmitted from the prime mover to the trailer, this reduces the response time of the trailer brake system when com-pared to the conventional pneumatic control signal, as well as allowing simultaneous braking of prime mover and trailer. The shorter response times will reduce stopping distance as well as reduce brake wear by helping to equalize the brake load between the truck and the trailer.

Trailer Roll Stability Program

The integrated function automatically helps to prevent trailer roll-over during cornering. The trailer EBS module monitors the lateral acceleration of the trailer and is able to determine when an unstable condition is imminent. Should this condition arise, the brakes are automatically applied on the trailer to re-duce vehicle speed and hence lateral acceleration, thereby enhancing vehicle stability. When the threat of instability is no longer present, the brakes are automatically released and the system reverts to normal operation. This feature will be active when the trailer is connected to either an EBS or ABS prime mover.

Anti-Lock Brakes (ABS)

The Anti-lock brake (ABS) feature is a “split-mu” system that gives maximum stability on most surfaces. The ABS function has an optional stop-light backup. This feature will be active when the trailer is connected to either an EBS or ABS prime mover.

Brake Performance Monitoring

Brake Performance Monitoring gives an indication of the braking effort applied by both the truck and the trailer. This effectively identifies problems such as overly aggressive truck or trailer brakes or overuse of the trailer brake hand piece. This information is available with the **Fleet +** software, and is accessed by attaching a computer to the Transpec Multivolt EBS valve.

Electronic Load-Sensing

Transpec Multivolt trailer EBS has integrated Electronic Load-Sensing, which tunes the trailer brakes to the load of the vehicle. This is highly recommended for trailers towed behind EBS prime movers, or prime movers with a Load Sensing Valve. Truck-trailer combinations usually have balanced brakes when the vehicles are laden, however they are normally not very well balanced when empty or partially laden. This results in unsafe braking — especially on wet roads — and in either the truck or the trailer brakes wearing quickly.

Properly adjusted Load Sensing on the trailer will not only deliver good brake feel, but also provide reduced brake wear, as the truck and trailer brakes will be taking their fair share of the braking load. This feature will be active when the trailer is connected to either an EBS or ABS prime mover.

Fleet + Software (Optional)

The Transpec Multivolt EBS valve stores various operational parameters regarding braking and trip performance within an internal memory which can then be accessed via a laptop running the optional **Fleet +** software and then analysed for vehicle / driver performance. Simply plug the **Fleet +** programmed laptop into the valve via the optional hardware kit and download the data for assessment and interpretation.

Info Centre 2 – (Optional)

The **Info Centre 2** Unit is an easy-to-use trailer mounted display that has the ability to display valuable information for the driver. This information includes:

- Trailer related information – for example: odometer, trip meter, service intervals.
- Trailer EBS information.

Info Centre 2

Reset to Ride Raise/Lower Valve

The **Reset to Ride Raise/Lower Valve** is able to automatically reset the suspension to ride height. So, in the event the driver does not position the Raise/Lower Valve back to the ride height setting before driving the vehicle, this RTR Raise/Lower Valve can prevent costly damage to the vehicle and the suspension by resetting to ride mode when the vehicle speed exceeds 6 km/h, refer pages 64 - 65.

Reset to Ride Raise/Lower Valve

Axle Lift Control

The Transpec Multivolt EBS can also control your axle system, refer to page 50 - 62

Braking with Transpec Multivolt EBS

Transpec Multivolt EBS will be functional only if it is powered and the warning light is not indicating that there are faults in the system.
With a functioning Transpec Multivolt EBS, in an emergency apply full force on the brake pedal. The Transpec Multivolt EBS will be activated immediately you fully apply the brakes and will assist you to retain steering control of your vehicle according to the road surface conditions.
Do not apply and release the brakes by pumping the brake pedal. This is known as 'cadence braking' and can have a detrimental effect on the braking of a vehicle fitted with EBS.

Power

The Transpec Multivolt EBS control module kits are supplied as a multivolt system, i.e., the EBS valve operates at any voltage between 8 volts and 32 volts. Note that there are differences between the 12 Volt and 24 Volt EBS plugs and sockets. Refer diagrams for the differences between the ISO 7638 12 Volt and 24 Volt sockets, note the different position of the keyway.

The Transpec Multivolt EBS has full functionality only when plugged in via the EBS cable to the prime mover (or preceding trailer which in turn is connected to a prime mover).

Full EBS functionality is achieved only if the Transpec Multivolt EBS is supplied with a CAN signal that corresponds to the ECU supply voltage via pins 6 and 7 in the EBS socket.

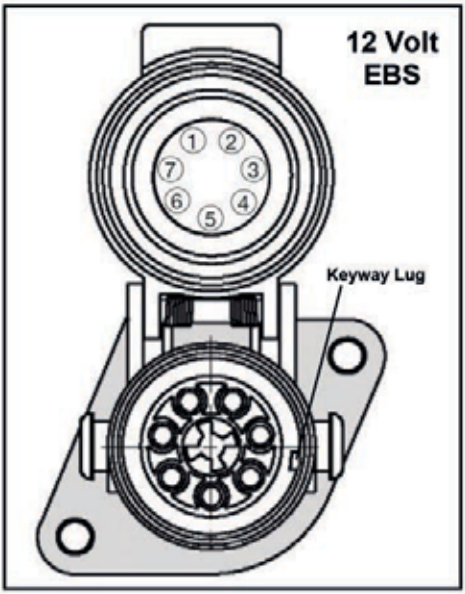

Seven Pin ISO 7638 EBS Socket for 12V EBS

Five Pin ISO 7638 EBS Socket for 12V ABS/EBS

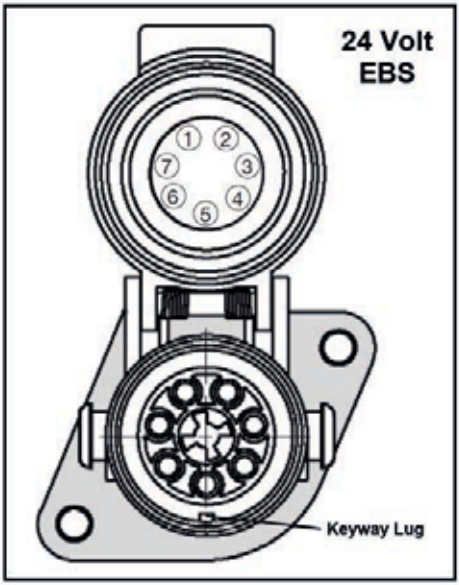

Seven Pin ISO 7638 EBS Socket for 24V EBS

Note: Transpec Multivolt EBS can be powered by either an EBS or an ABS prime mover supplying between 8 volts and 32 volts via the ABS / EBS plug.

The CAN signal voltage supplied via pins 6 and 7 in the EBS socket must correspond with the ECU supply voltage.

When the Transpec Multivolt EBS is not powered via the EBS cable the braking system on the trailer reverts to a normal relay valve system which still performs braking operations according to the required ADR 38 statutory regulations.

There is an option for limited functionality via a stop lamp backup connection.

None of the other auxiliary functions associated with the EBS work while the system in this unpowered state.

When the Transpec Multivolt EBS is powered via the EBS cable, it is possible for the brakes to work autonomously. The Trailer Roll Stability Program recognises an impending potential rollover and activates the brakes independently of the driver.

Vehicles fitted with Transpec Multivolt EBS will have a sticker on the trailer indicating the need to connect the EBS cable.

EBS Sticker on Trailer

Note: With the EBS Cable unplugged the Trailer Roll Stability Program is not operative.

Truck / Trailer EBS Functionality Chart

Prime Mover Brake System Configuration	Trailer EBS Functionality				
	Electronic Brake Actuation	ABS	Electronic Load Sensing	Roll Stability	Info Centre (Optional)
EBS Electronic Brake System	✓	✓	✓	✓	✓
ABS Anti-Lock Brake System	✗	✓	✓	✓	✓
Conventional (without EBS or ABS)*	✗	✓*	✓*	✗	✗

* With optional brake light power system.

System Diagnostics

Warning Light

For towing vehicles that have either an ABS or an EBS braking system, a warning light located on the driver's console of the towing vehicle is operated from the EBS cable only when the Transpec Mul-tivolt EBS is powered by the ignition switch. (Figure 1)

Figure 1

System Check Procedure

1. When the ignition is turned on the warning light on the driver's console shows the following flash sequence (Figure 2), to indicate an error free system:

System Check Procedure	
ON for 2 seconds	Warning light OK and system self checking
OFF	System self-checked (wheel speed sensors not checked)

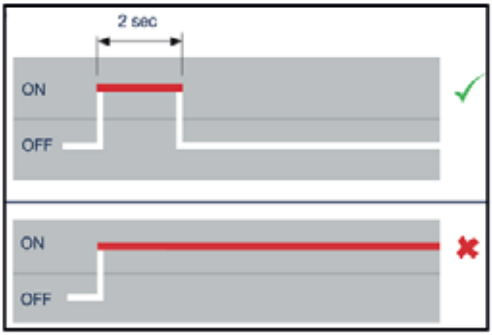

Figure 2

2. During the self check procedure, the system cycles the Electro Pneumatic Relay Valves **(EPRV's)**. With foot brake applied one exhaust of air from each **EPRV** will be audible (Figure 3).

Once these two checks are made with correct results, no further checks are required.

If the results are not satisfactory, the **relevant software** should be used to establish the diagnosis.

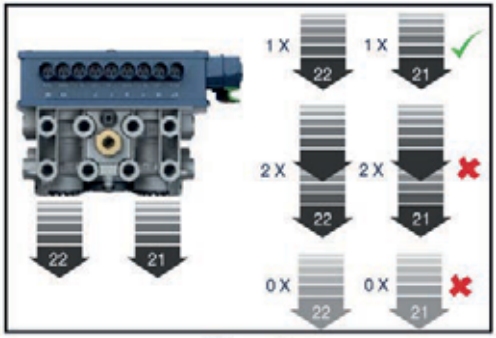

Figure 3

✓ - Indicates that EBS is operating correctly.

✖ - Indicates fault with EBS.

System Diagnostics

An important feature of the Transpec Multivolt EBS is that it provides an extensive on-board diagnostic capability.

Diagnostic communication is accessed by an optional side of vehicle connector (Figure 4a) or via either the EBS cable (Figure 4b) or directly to the ECU (Figure 5).

The **Info Centre 2** (Figure 6) can be connect-ed permanently to the ECU's diagnostic connection. While the ECU is powered information is transferred to the Trailer Monitor's memory, which can be recalled.

Power is supplied from the vehicle system via the ECU diagnostics connector.

The **Info Centre 2** Monitor displays the information on distances, installation, auxiliaries, tests, etc. on a backlit dot-matrix LCD screen.

Plugging a separate computer running the relevant software to the EBS valve allows for the retrieval of more detailed information from the EBS valve ECU (Figure 5) than can be obtained from the **Info Centre 2**.

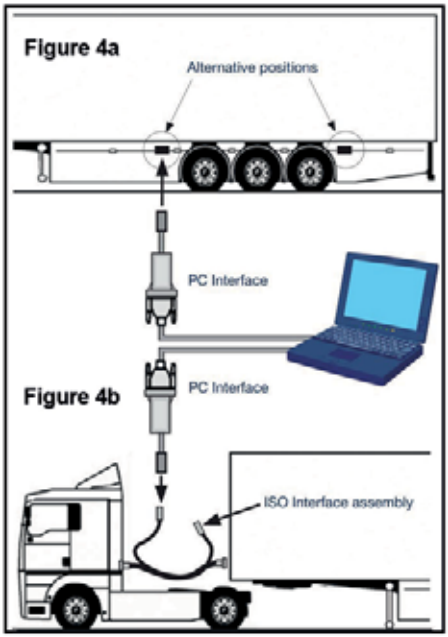

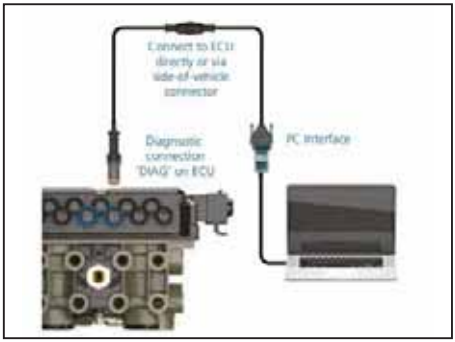

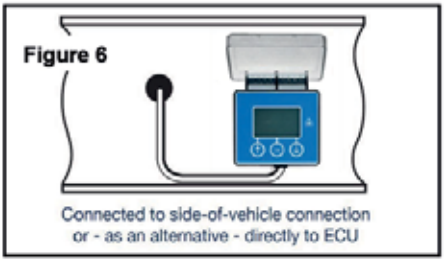

Power Up Modes

The Transpec Multivolt EBS system has two power up modes. With switching the ignition on the following occurs:

With no blue line pneumatic pressure (i.e. Brakes OFF)

The system adopts automatic load sensing mode when the brakes are applied. This load sensing mode is limited to 2 minutes for any single brake application, after which it returns to a push-through condition (approximately 1:1)

The push through condition is cancelled on a vehicle movement above 10 km/h returning the system to automatic load sensing operation.

With blue line pneumatic pressure (i.e. Brakes ON)

Switch the ignition on while the foot brake is applied. The system adopts a push-through (approximately 1:1) condition. When the brakes are released and re-applied the system re-mains in push-through unless the brakes are released for longer than two minutes, after which it returns to automatic load sensing operation.

This condition is cancelled on vehicle movement above 10 km/h returning the system to automatic load sensing operation.

This system is included to assist in static brake system pressure balance testing.

Other errors shown by the warning light.

The warning light will flash when the system is powered up when at rest. **The Transpec Multivolt EBS** incorporates a light flash of three flashes.

This light flash sequence relates to:

1. **Service due** - indicates that trailer or system service distance is due. After servicing the trailer or system the next service distance must be reset by using the Info Centre 2.
2. **Non EBS Fault** - A fault with a device connected to the Transpec Multivolt EBS but not directly effecting the EBS, for example: **Reset-to-Ride Valve**

Caution

No welding work may be performed on the vehicle without disconnecting all sensors and power cables to the ECU.

For more information please consult the relevant **Installation** and/or **BPW Operator's Manuals.**

Recommended Maintenance Schedule

Time or Mileage (whichever occurs first)	Component	Operation
Every 3 months or every 40 000km	Complete System	Perform system check out and air leakage check.
Annually or every 160 000km	Complete System	Perform system check out and air leakage check. Check wiring and piping security and integrity
	Wheel Speed Sensor	Check for wear, clean and readjust. Check output.

EBS Components

EBS systems are comprised of two parts - electric and pneumatic. The system requires power to operate. For this reason check the electric portion of the EBS system (cables, pins, sockets, inverter, etc.) when maintaining the trailer electrical system.

Wheel Speed Sensors

When replacing the hub units after servicing ensure that the wheel speed sensors are pushed in to the end stop. When the bearing adjustment of the hub is performed correctly the wheel speed sensor will correctly set its own gap to the pole ring in the hub. For complete details of BPW Hub Unit servicing see pages 10-19.

Check the wheel speed sensors for damage or displacement (displacement force 100 - 200 N).

Remove the wheel speed sensors and clean thoroughly. Lubricate clamping bush and sensor with special dielectric (non-conductive) silicone grease and refit sensor.

Ensure that the wheel speed sensors are pushed up to the end stop before the hub units are re-fitted.

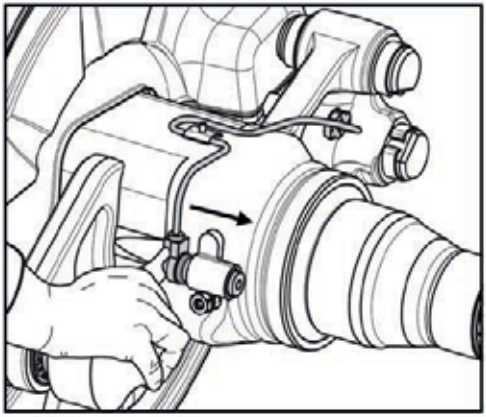

BPW Weight Watcher System

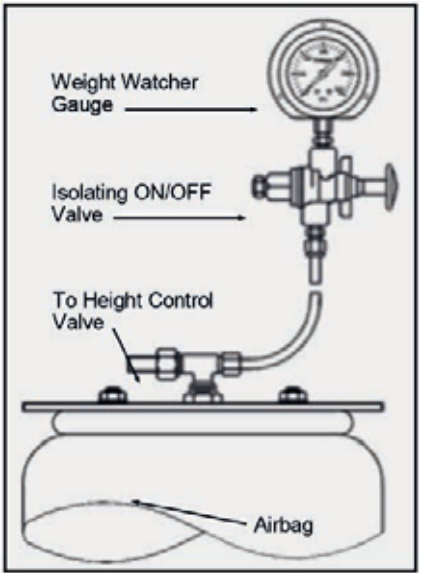

The air pressure in the airbags of an airbag suspension is a good indicator of the axle group load. This air pressure is proportional to the mass on the axle so airbag pressure can be used as a guide to axle load.

The most accurate method of calibrating the airbag pressure to axle load is by noting the airbag pressure for a known axle load, which can be done over a weigh-bridge. An example of this calibration method is shown on page 91. Different airbag suspension con-figurations will have different airbag air pressure to axle load relationships, since variables such as airbag size, airbag location relative to the axle and hanger location relative to the axle all come into play. Re-aligning a suspension may also affect the airbag air pressure to axle load relationship.

Note that, for the greatest accuracy, the following should be observed when calibrating the Weight Watcher pressure gauge and, when using this gauge to estimate axle group load:

- The vehicle must be stationary
- The wheels must be free to move backwards and forwards (so that the axle is not re-strained from moving up or down) which means that the following should be observed:
    - The brakes must be released
    - The wheels must not be chocked
    - The wheels must not be in ditches (as can happen on soft ground)
- If loading the vehicle, air must be supplied to the airbag suspension to allow it to inflate to the correct ride height
- Whether loading or unloading the vehicle, the pressure reading must be taken when the suspension is at ride height., i.e. the height control valve must not be in the inflate or deflate mode
- The vehicle must be on reasonably level ground (which, in any case, will need to be so to allow the brakes to be released)

The weight watcher air gauge weight indication kit comes complete with an isolating on/off valve so the gauge is only used when a reading is required. This protects the air gauge in-ternal workings from constant air pressure fluctuations and will prolong the life of the gauge.

The air gauge itself is glycerine filled to further protect its internals and gives far superior sealing to prohibit the ingress of dust and moisture.

1. Note the weight over a weighbridge of a loaded vehicle. In the above example, refer to point A which, in this case, shows an airbag pressure on a tri-axle group of 380 kPa for a weighbridge axle group load of 20,5 tonne.
2. Note the weight over a weighbridge of a partially loaded vehicle. With the above example, with the same trailer, refer to point B which shows an airbag pressure of 220 kPa for a weighbridge axle group load of 13 tonnes.
3. Graph the results, as shown above, and rule a straight line between points A and B.
4. To obtain what the pressure reading would be, for example, at an axle group weight of 22,5 tonne, read the graph, as shown with point C which, in this case, indicates an airbag pressure of 415 kPa.

EXAMPLE ONLY: Tri-axle Airbag Suspension

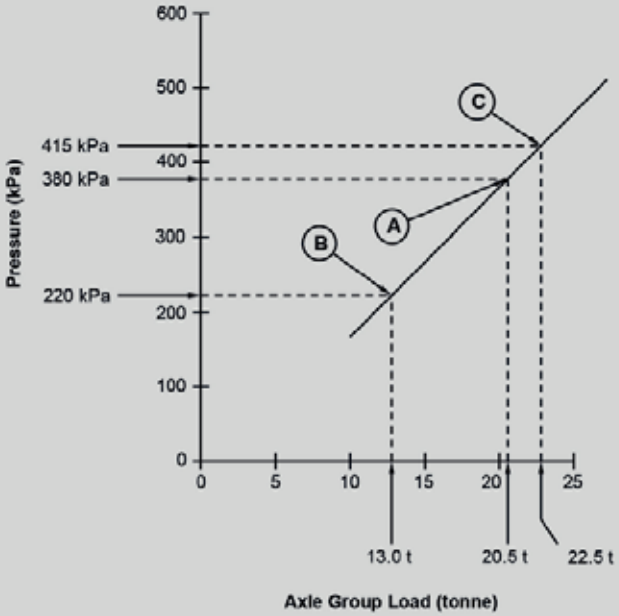

The pressure reading at other axle group weights can be read from the graph as shown in the example with Item 4.

Note: **a)** The accuracy of the pressure gauge in estimating axle group weight depends on the accuracy of the weighbridge used for calibration.
b) Airbags tend to grow slightly with use, so an older unit will tend to carry more load for the same airbag pressure. Pressure gauges may also drift with age, so regular calibrations are recommended.
c) For greatest accuracy, the calibration weighing over a weighbridge should ideally be as close as possible to the target axle group load, i.e. if you need to know when you have 21 tonne over a tri-axle, try to make your calibration readings at the axle group loads as close as possible to 21 tonne and if your calibration reading is at 21 tonne then there is no need to draw a graph, since you know what the airbag pressure will be at this axle group load.

BPW Landing Legs

1.1 Use Only For Intended Purposes

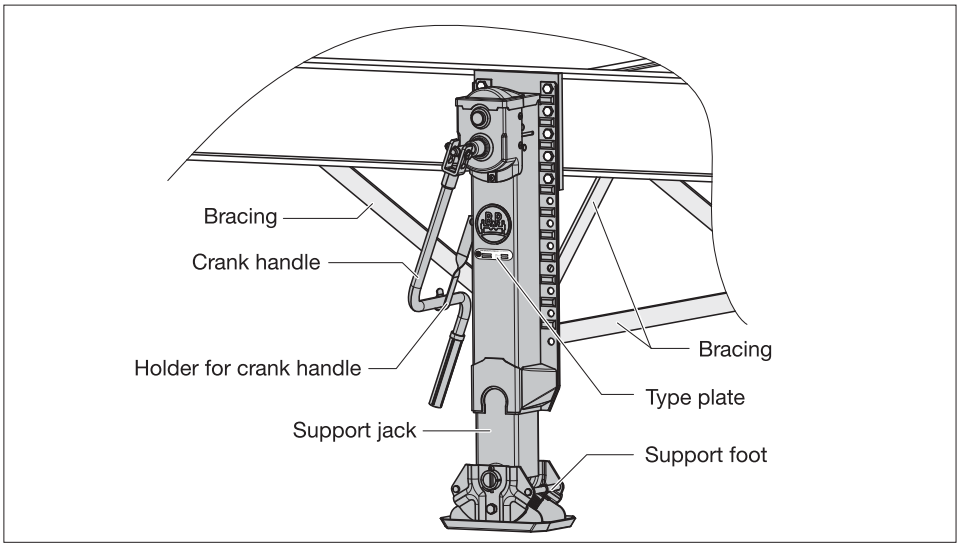

These BPW support jacks are intended for installing on a trailer vehicle. They provide support for the uncoupled trailer or semi-trailer, as well as for adjusting their height during the coupling procedure.

The support jacks can be used with laden or unladen vehicles.

The loading of an unhitched vehicle is permitted, provided that the relevant safety instructions are followed.

The vehicle must not be used on the road until it has been established that the trailer vehicle and landing gear comply with the road traffic regulations of the country concerned.

The landing gear may only be used if the relevant operating and service regulations of the vehicle manufacturer and the landing gear are observed. Operating the vehicle with damaged landing gear is prohibited.

1.2 General Safety Notes

- All work must be carried out by trained specialist operatives in approved specialist workshops and authorised specialist organisations, which possess all the tools and knowledge required for carrying out this work. A pre-condition for carrying out installation, maintenance and repair tasks is having successfully completed a course of training as a motor vehicle mechanic with experience in repairing trailers and semitrailers.
- The vehicle must be secured against rolling away when carrying out repairs. Adhere to the valid safety instructions for carrying out repairs to commercial vehicles, particularly the safety instructions for jacking up and securing the vehicle.
- The relevant operating and service instructions and the safety instructions of the vehicle manufacturer or of the other vehicle component manufacturers must be followed.
- Only carry out repair work with protective clothing (gloves, protective shoes, safety goggles etc.) and the recommended tools.
- Bolts and nuts must be tightened with the prescribed tightening torque.

BPW Landing Legs

1.3 Installation

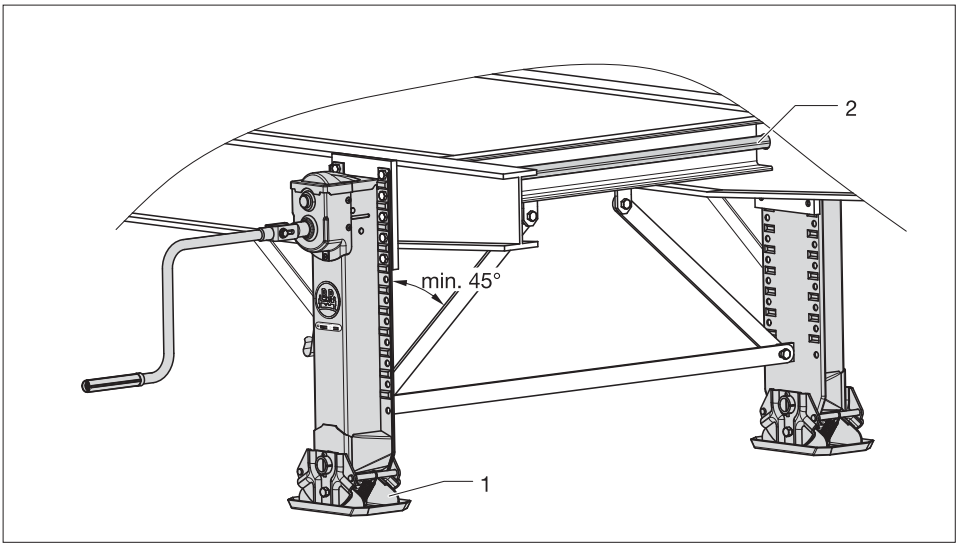

[1] Screw in both support jacks (1) as far as they will go. This will ensure that both supports are positioned in parallel when they are extended.

[2] Align the supports so that they are at a right angle to the frame and parallel to each another.

[3] Measure the length of the connecting shaft (2) and adjust this accordingly.

[4] Install the connecting shaft without jamming. A sliding gap of 8 ± 3 mm must be maintained. Jamming of the connecting shaft may impede ease of movement.

[5] Screw each support to the frame with at least 10 hexagonal M 16-8.8 bolts, hexagonal nuts and ring washers.

[6] Fit the bracing members between the legs and to the rear of each leg. Ensure that an angle of at least 45° to the support is maintained while doing this. Screw on the braces likewise with hexagonal M 16-8.8 bolts, hexagonal nuts and ring washers.

[7] Tighten all securing bolts with a torque wrench to the prescribed tightening torque of 190 Nm (175 - 210 Nm).

[8] Install the holder to secure the crank handle. For safety reasons, the crank handle must be mounted in the holder while the vehicle is in motion.

Carry out a function check after installing the landing gear. The spindle must be turn easily during this and the supports must both be touching the ground at the same time.
Uneven loading of the supports will lead to damage.
All warranty claims against the manufacturer and the supplier of the landing gear will be validated if installation is not carried out properly.

BPW Landing Legs

1.4 Operation

Operating safety notes

- The landing gear must only be operated by authorised personnel.
- Before operating the landing gear, the vehicle must always be secured against rolling away.
- No persons must be present beneath the vehicle during hitching and unhitching and when a vehicle is being supported.
- No persons must be present beneath the vehicle during the coupling procedure.
- Fast or slow gear must always be engaged.
- Care must be taken to avoid handle kick-back by completing the turning movement slowly.
- While the vehicle is in motion:
  - The crank handle must be installed and mounted in the holder
  - The landing gear must be completely retrected
  - The landing gear must be in a proper condition, with any defective support equipment having been repaired or replaced.
- When the vehicle is being supported, care must be taken that:
  - The ground underneath is sufficiently firm, with a suitable base being provided if necessary.
  - The ground must be even
  - The support foot must be freely movable
  - The upper and lower hoist limiters are not overwound.

BPW Landing Legs

1.4 Operation

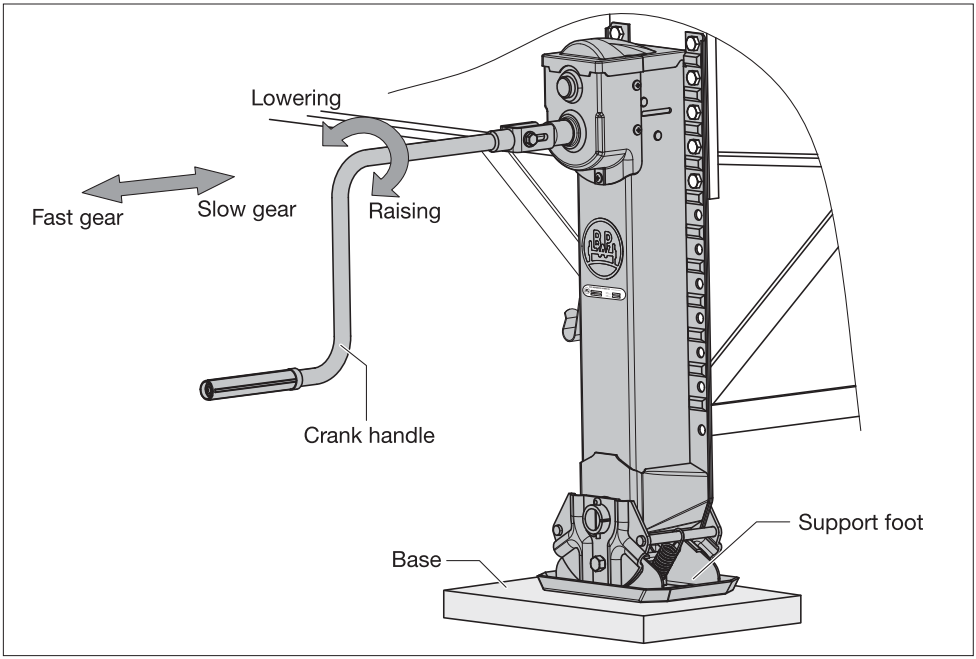

1.4.1 Parking the trailer vehicle

[1] Park the trailer vehicle on a firm and level surface, using a base if necessary.

[2] Secure the vehicle from rolling away.

[3] Check the landing gear for damage and repair before use if necessary.

[4] Remove the crank handle from the holder and pull out until the locking mechanism is engaged. The switching procedure is made easier with a slight turning movement.

[5] Turn the crank handle clockwise, therefore extending the support in fast gear until it is just above the ground. The fast gear enables the clearance height to be reached quickly when extending or retracting without a load.

[6] Switch to the slow gear. Press in the shaft with the crank handle until the locking mechanism is engaged. The switching procedure is made easier with a slight turning movement. The slow gear is used to raise or lower a laden or unladen trailer vehicle.

[7] Unhitch the vehicle.

[8] Mount the crank handle in the holder with the slow gear engaged.

BPW Landing Legs

1.4 Operation

1.4.2 Coupling the trailer

[1] Take the crank handle from the holder.

[2] Check whether the low gear is engaged and engage if required (see [6] page 95).

Take pressure off the crank handle slowly when the desired coupling height has been reached.
There is a danger that the handle may kick back.

[3] Turn the crank handle in slow gear:
- Clockwise: to raise
- Counter-clockwise: to lower.

[4] Raise the trailer to the desired coupling height. Leave the spindle in slow gear.

[5] Couple the trailer vehicle.

[6] After coupling, fully retract the landing gear.

[7] Mount the crank handle in the holder with slow gear engaged.

1.4.3 Loading the supported trailer vehicle

The supported trailer vehicle may only be loaded with a crane or driven onto with a fork-lift truck if the relevant safety instructions have been complied with.

Do not exceed the centre of gravity of the vehicle during the loading procedure, otherwise the drawbar trailer vehicle could tip over.

BPW Landing Legs

1.5 Lubrication and maintenance work

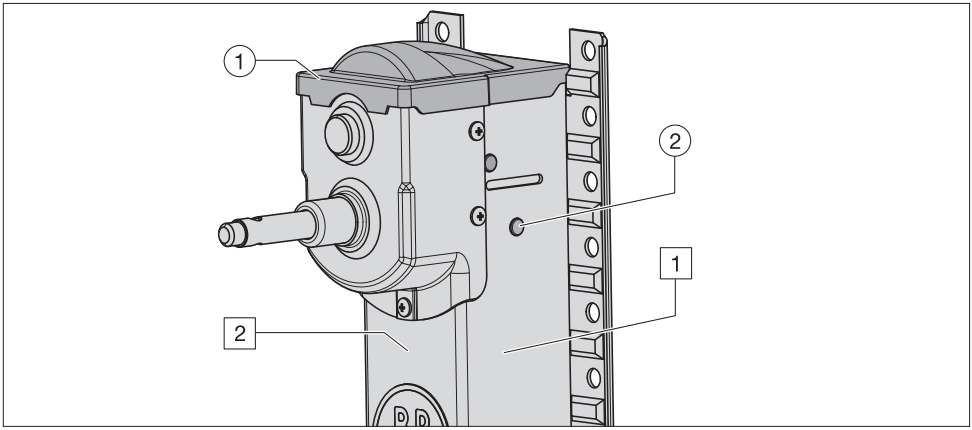

Overview of lubricating work		
		Every 12 months in service
1	Grease the transmission	1
2	Grease the spindle and spindle nut	2

Note: After cleaning the vehicle with high pressure cleansers, all lubrication points must be re-lubricated.

Overview of maintenance work			
		With every use	Every 12 months in service
1	Visual check of the landing gear for cracks and deformation	1	
2	Check the spindle and spindle nut for wear		2

BPW Landing Legs

1.5 Lubrication and maintenance work

Lubricating work

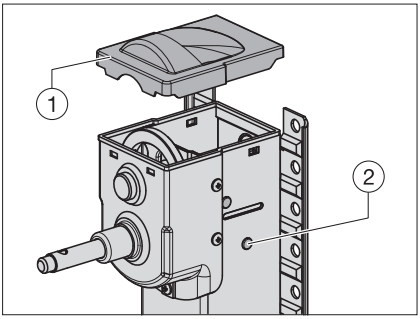

(1) **Greasing the transmission**
- Initially after 3 years, then annually -

Remove the upper transmission cover.
Fill the transmission housing with BPW special longlife grease ECO-Li 91.
Fit the transmission cover.

(2) **Grease the spindle and spindle nut**
- Initially after 3 years, then annually -

Screw out the jack as far as it will go. Remove the sealing plugs in the housing. Lubricate the spindle nut with approx. 200 g BPW special longlife grease ECO-Li 91. The spindle must be extended and then retracted again over the entire stroke. Insert sealing plugs.

Maintenance work

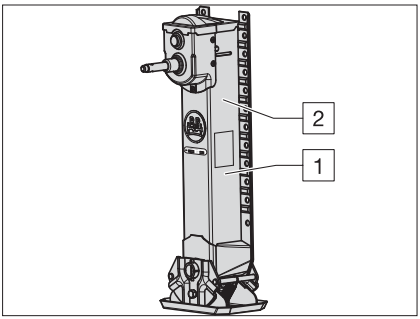

[1] **Visual check of the landing gear for cracks and deformations**
- With every use -

Check landing gear and braces for damage, difficulty in movement, cracks and deformation.

Damaged landing gear must be repaired or replaced immediately.
Operating with defective landing gear is not permitted!

Check that support foot and support foot attachment are in good condition and undamaged.

[2] **Check the spindle and spindle nut for wear**
- Initially after 3 years, then annually -

BPW Landing Legs

1.6 Technical Data

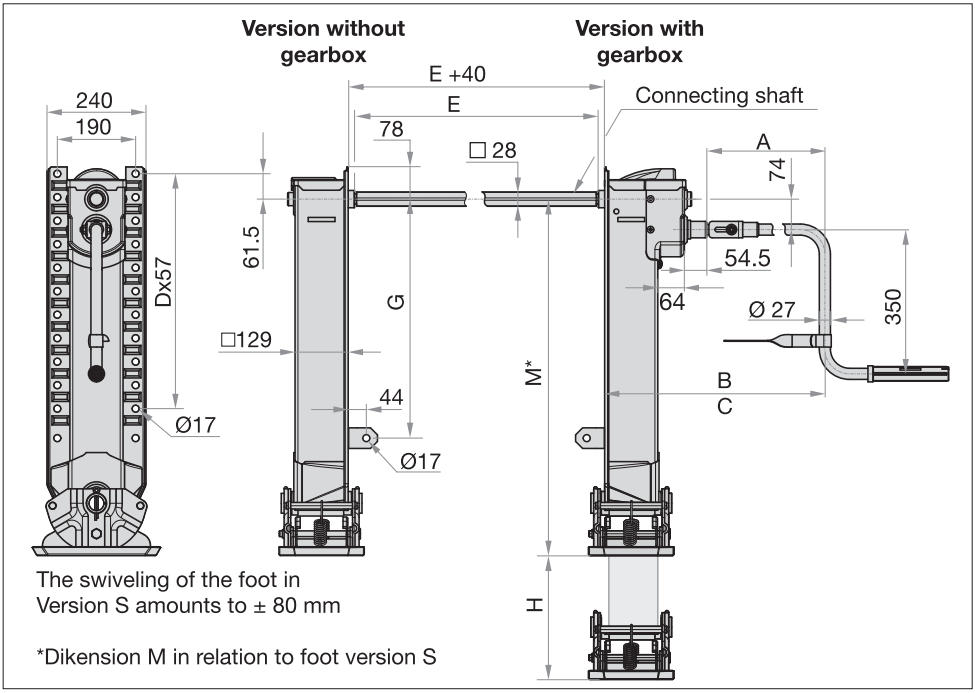

Support feet (without support jack)

Version **S**	Version **T**	Version **R**	Version **A**
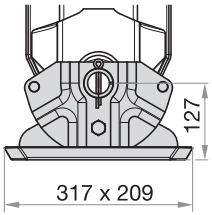	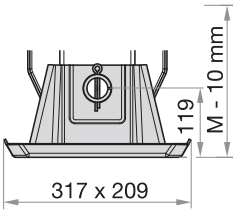	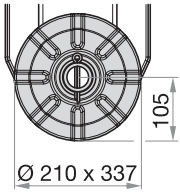	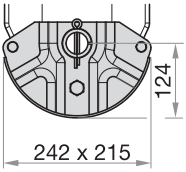
BPW code number: 02.3710.01.01	BPW code number: 02.3710.00.00	BPW code number: 02.3710.02.00	BPW code number: 02.3710.03.01

BPW Special Tools

In order to simplify the maintenance procedures on BPW axles and airbag suspensions a comprehensive range of special tools are available.

BPW tools offer the following advantages:

- **Tried and tested design**
  Tools must prove their worth in everyday use. Only then does it become clear whether tools are up to the demands of the real world.
- **Use of high-quality materials**
  High-quality materials are absolutely essential for producing high-quality tools. Continuous quality assurance guarantees consistent quality.
- **Favourable price/performance ratio**
  Quality is not always obvious at first glance (e.g. materials). Buying quality tools is often the cheaper option in the long term. This particularly applies in those cases where tools are regularly needed and where their trouble-free use must be guaranteed at all times.
- **Long service life, low wear**
  BPW tools are designed to be particularly resistant to wear and tear, and guarantee an extremely long service life, even with frequent use.
- **Simple to handle**
  Ideal solutions are always simple. This statement also particularly applies to tools. For that reason BPW tools are designed strictly to meet the necessary technical requirements. Solutions that do not meet practical requirements are rigorously weeded out at the development stage.

  The following pages show a representative range of the tools available. For complete details please contact your local **BPW Transpec** office or **BPW agent.**

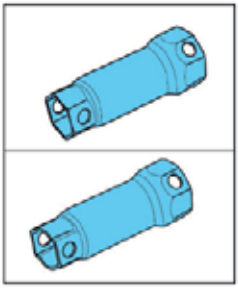

Steel tube, long design, galvanised

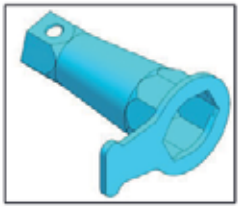

Combination Spanner, galvanised

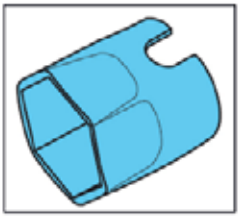

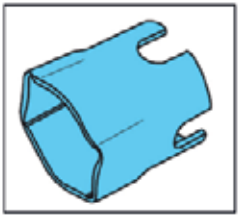

Steel tube, galvanised

Box Spanner for Hub Cap and Axle Nut

Combination box spanner for hub cap and axle nut for various BPW hub units

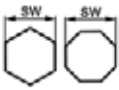

SW Hexagonal - 80 mm
SW Octagonal - 110 mm
03.364.27.01.0

SW BPW Shape - 80 mm
SW Octagonal - 110 mm
03.364.27.03.0

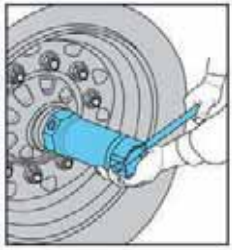

Combination Spanner

BPW Transpec also offers a combination spanner where the Ring Spanner for the Hubcap is welded to the Box Spanner for the Axle Nut.

03.364.27.01.0M
(80 mm hex / 110mm Octagonal)

03.364.26.03.0M
(65 mm BPW Shape / 95mm Octagonal)

03.364.27.03.0M
(80 mm BPW Shape / 110mm Octagonal)

Box Spanner for Axle Nut

Box spanner for setting of BPW Hub Unit axle nuts.

SW Hexagonal

65 mm	- **03.364.20.01.0**
80 mm	- **03.364.24.01.0**
85 mm	- **03.364.25.01.0**
95 mm	- **05.364.26.05.0**
100 mm	- **03.364.26.02.0**

SW BPW Shape

65 mm	- **03.364.20.02.0**
80 mm	- **03.364.24.02.0**

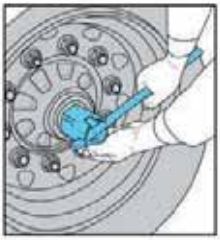

☞ **Always check the setting with a torque wrench as soon as possible afterwards.**

BPW Special Tools for Axles and Hubs

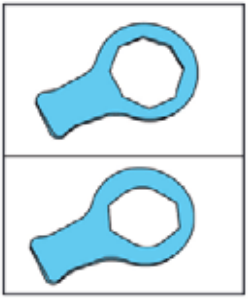

Steel Plate (ST 52) galvanised

Ring Spanner for Hub Cap

Designed for emergency use, this ring spanner can be carried in the vehicle tool kit for use anywhere at any time.

Caution - repeated use of this spanner may lead to damage to the hub caps.

SW Octagonal

95 mm - **03.339.04.01.0**
110 mm - **03.339.05.01.0**
120 mm - **03.339.05.02.0**
130 mm - **03.339.05.03.0**

SW BPW Shape

95 mm - **03.339.04.03.0**
110 mm - **03.339.05.04.0**

☞ **Always check the setting with a torque wrench as soon as possible afterwards.**

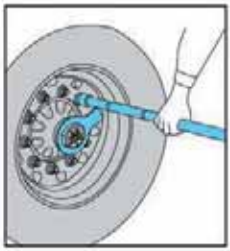

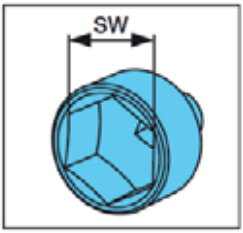

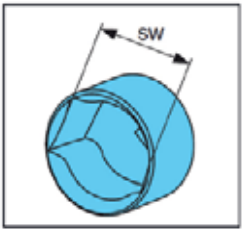

Chromium-steel box spanner (31 CR V3)

Socket Spanner for Workshop Use

To correctly set the bearing play in the hub utilising a torque wrench.

For Axle Nuts -

SW BPW Shape

65 mm - **03.364.20.03.0**
80mm - **03.364.24.03.0**

For Hub Caps -

SW Octagonal

110 mm - **03.364.27.04.0**

SW BPW Shape

95 mm - **03.364.29.02.0**
110mm - **03.364.29.03.0**

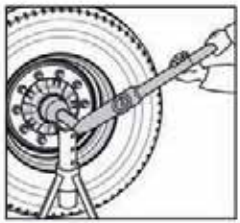

All BPW box spanners require either a 1/2" or a 1" drive torque wrench

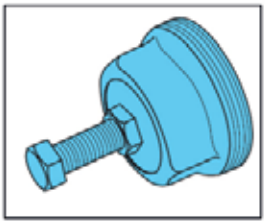

Steel sheet, without screw, galvanized. Oder screw separately.

Hub Puller for Wheel Hubs

For Conventional Hub Units

SW BPW Shape

110 mm - **05.012.27.05.0**

M22 x 100 Screw - **02.5026.70.80**

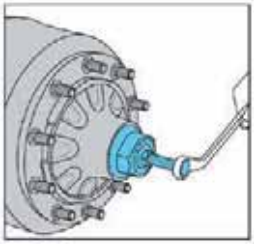

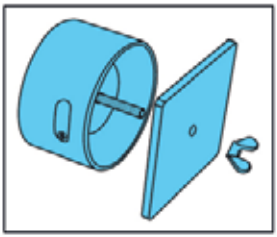

Grease Shower

To quickly, accurately and cleanly fill the hub bearings with the required amount of BPW special longlife grease **ECO-Li Plus.**

Available to suit: -

33116 / 32310 bearings - **99.00.000.9.54**
33118 / 33213 bearings - **99.00.000.9.55**

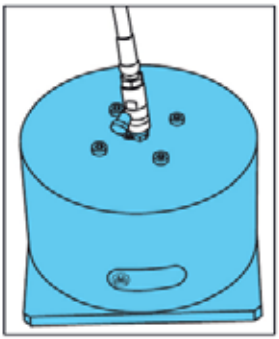

A flat grease nipple adapter is also available - **15.069.22935**

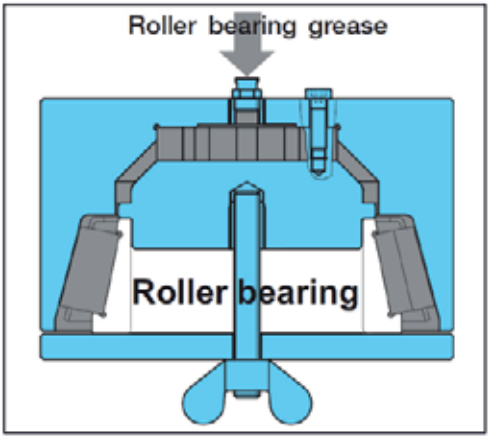

BPW Special Tools for Drum Brakes

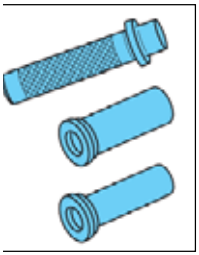

Driving Mandrel for S-Cam Bushes

Handle and mandrels available to correctly seat replacement s-cam bushes on BPW drum brake axles.

Handle and mandrels are available as a kit

05.001.04.04.0

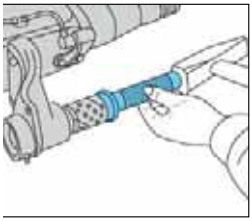

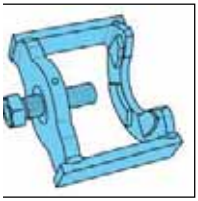

Pulling Device for Slack Adjusters

To quickly and safely remove slack adjusters on BPW drum braked axles.

02.4306.15.00

Suitable for both manual and automatic slack adjusters.

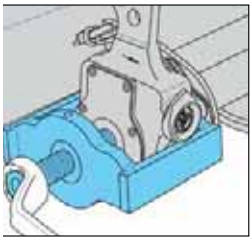

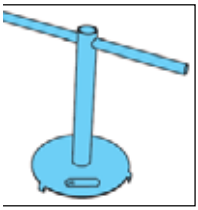

Exciter Ring (Pole Ring) Assembly Aid

To fit and remove ABS exciter ring from BPW 9 tonne ECO Plus Hub Unit axles.

16.020.22953

Suitable for both disc and drum brake axles.

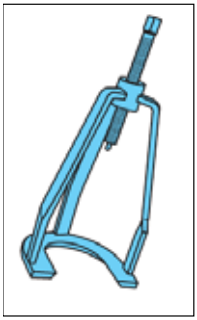

Drawing Tool

Drawing tool to remove taper roller bearing with thrust ring on Conventional Hub Units.

02.0125.10.00

Not required for ECO or ECO Plus Hub Units.

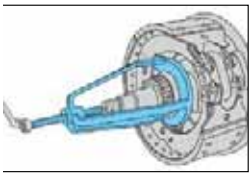

BPW Special Tools for Disc Brakes - SB Style Disc Brakes - see pages 46 - 53.

BPW Transpec also supplies a complete range of tools to overhaul disc brake cali-pers on BPW disc brake axles.

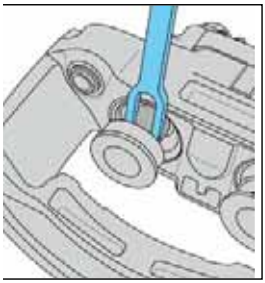

Pulling Fork
02.0130.42.00

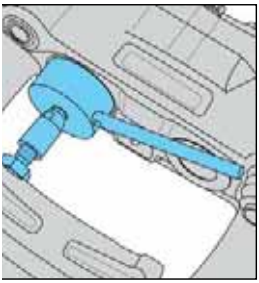

Pressing Tool
02.0130.39.00 / 62.00

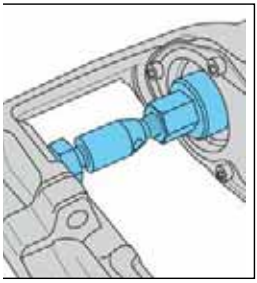

Secondary Seal Tool
02.0130.66.00

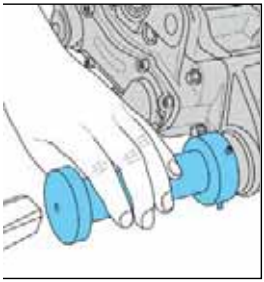

Cap Assembly Tool
02.0130.57.00

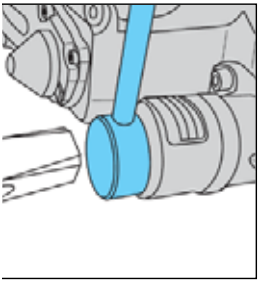

Cap Assembly Tool
02.0130.65.00

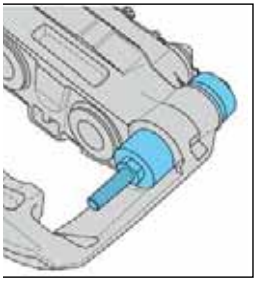

Inner Bellow Tool
02.0130.40.00 / 63.00

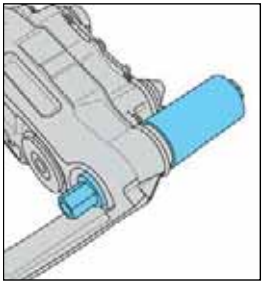

Brass Bush Tool
02.0130.41.00

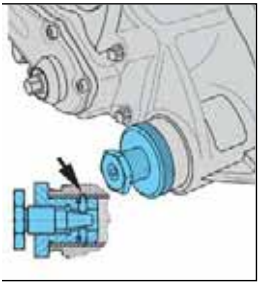

Caulking Tool
02.0130.52.00

Cap Pressing Tool
02.0130.58.00

For details of the full BPW range of tools for overhauling BPW SB Type disc brake axles please contact **BPW Transpec.**

Special Tools - BPW TS2 Disc Brakes

Brake tools

ECO Disc tool case for TS2 / TSB

BPW item number:

99.00.000.9.72

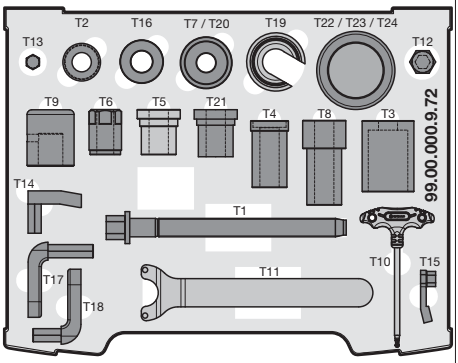

Consec. no.	Description	Illustration of tool	BPW item number:
T1	Threaded spindle	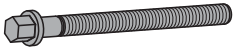	**02.0130.39.10**
T2	Ball bearing		**02.0130.40.10**
T3	Sleeve	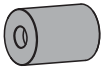	**02.1410.26.00**
T4	Extractor tool for floating and fixed bearings		**02.0130.41.10**
T6	Nut		**02.5270.37.00**
T7 / T20	Retractable plate		**02.1421.25.00**
T8	Pressing tool for fixed bearing	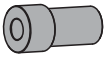	**02.0130.43.10**
T21	Pressing tool for floating bearing		**02.0130.72.20**

Special Tools - BPW TS2 Disc Brakes

Consec. no.	Description	Illustration of tool	Tool in operation
	Extractor tool for floating bearing Tool component parts: T1, T2, T3, T4, T6	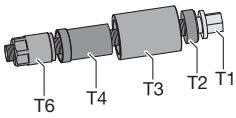	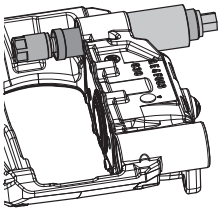
	Pressing tool for floating bearing Tool component parts: T1, T2, T4, T6, T20, T21	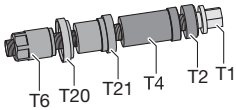	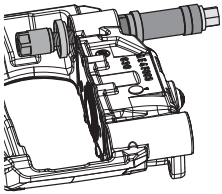
	Extractor tool for fixed bearing Tool component parts: T1, T2, T3, T4, T6	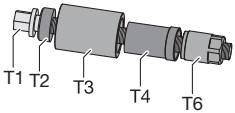	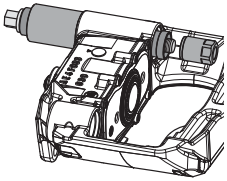
	Pressing tool for fixed bearing Tool component parts: T1, T2, T6, T8, T20	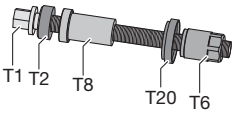	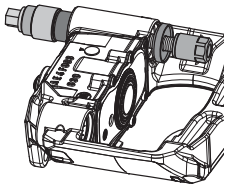

Special Tools - BPW TS2 Style Disc Brakes

ECO Disc tool case for TS2 / TSB

BPW item number:

99.00.000.9.72

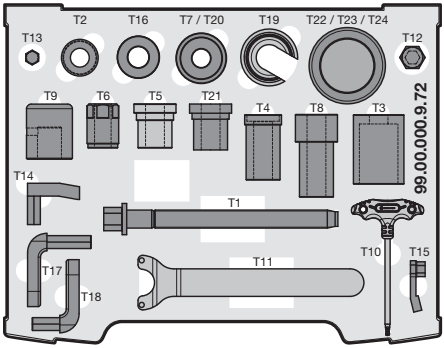

Consec. no.	Description	Illustration of tool	Tool in operation
T12	Adapter for moveable bearing bolt BPW item number: **02.0130.46.10** AF 14 / AF 24		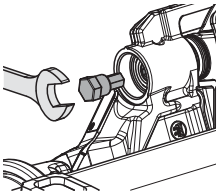
T13	Adapter for sealing cap BPW item number: **02.0130.47.10** AF 14 / AF 12		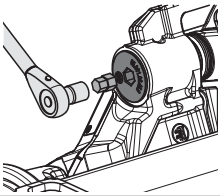
T14	Adapter for torque wrench (floating bearing) BPW item number: **02.0130.48.10** AF 14		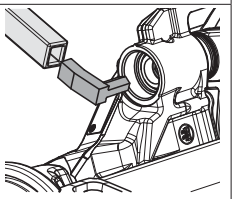
T15	Adapter for torque wrench (sealing cap) BPW item number: **02.0130.49.10** AF 14		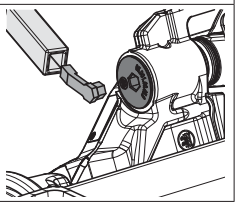

Special Tools - BPW TS2 Style Disc Brakes

Consec. no.	Description	Illustration of tool	Tool in operation
T16	Ring for tightening the wheel studs BPW item number: **02.5683.92.00**		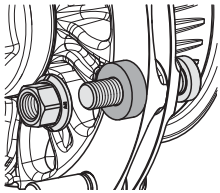
T17	Tool for fixed bearing bolt BPW item number: **02.0130.64.10** AF 14 / AF 14	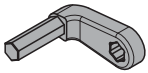	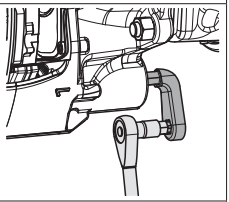
T18	Tool for moveable bearing bolt BPW item number: **02.0130.65.10** AF 14 / AF 14	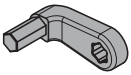	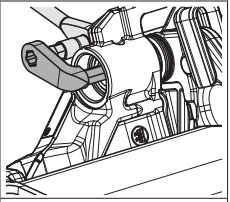
T22	Piston for bellow pressing tool BPW item number: **02.0130.74.20** Ø 83 / M 20 x 2	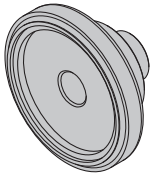	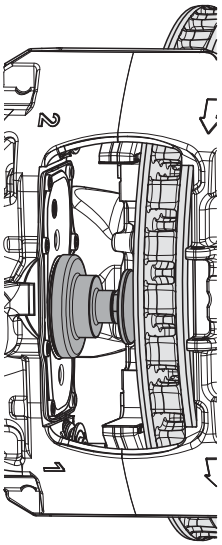
T23	Screw for bellow pressing tool BPW item number: **02.0130.73.20** M 14 x 2	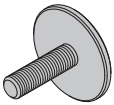	
T24	Spacer for bellow pressing tool BPW item number: **02.4319.42.00** AF 24 / M 20 x 2 / M 14 x 2	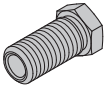	

Special Tools - BPW TS2 Style Disc Brakes

Description	Illustration of tool
TS2 supplemental set for TSB tool case BPW item number: **09.801.08.82.0**	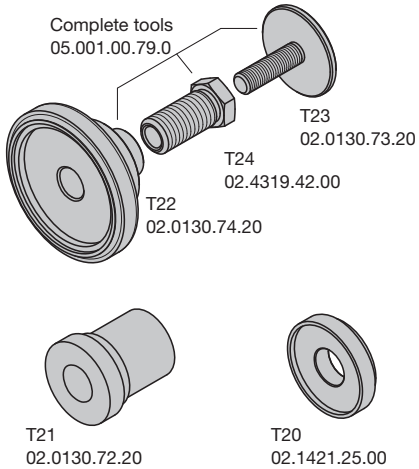

BPW TSB Disc Brake Service Tips

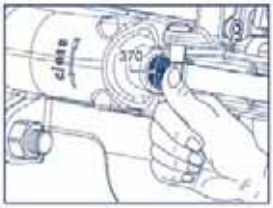

Background

In 2010 BPW axles changed from using the KNORR BREMSE SB style disc brakes to using their own BPW TSB disc brake system.

1. When backing off the brake to insert new pads do not turn the T25 adjustment screw back too far as the internal thread may jam and prevent the caliper from re-adjusting properly.
2. When removing the old worn brake pads the dowel on the front of the tappet may become wedged inside the hole in the backing plate – pulling the tappet out of its mount. Should this occur check the tappet boot for tears or cracks and if undamaged reinsert the tappet into its housing.

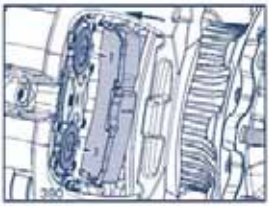

3. Always install the inner pad first – ensuring that the dowels on the tappets are correctly lined up with the holes in the rear of the pad. Then install the outer pad.
4. When installing new tappet boots tap the clips on the face of the caliper inwards slightly to tighten the grip they have on the bayonet clip when re-installed.

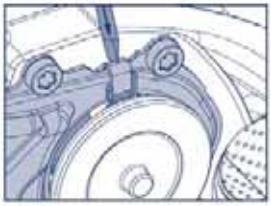

5. Always ensure that new anti rattle / wear plates (389) are installed in the caliper before the new pads are installed.
6. Check the brake pad retention bridge for any signs of wear. Replace the retention bridge if signs of wear are present.
7. If the caliper is removed for any reason the cap screws that attach the caliper to the axle beam must be replaced. Never attempt to re-use the old cap screws.
8. The correct tightening torques for the new cap screws are: Tighten the cap screws to **150Nm** and then turn through
   180° rotation
   Or alternatively
   Tighten to **M = 260Nm** (250Nm - 270Nm)

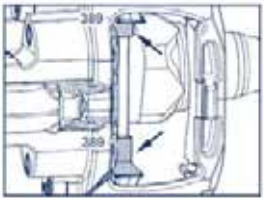

9. To adjust the BPW TSB disc brake system park the vehicle on level ground and release the brakes. Tighten up the T25 adjustment screw (retained under the rubber cap - 370) until the wheel stops turning – do not over-tighten the adjuster. Now back the adjustment off 2 ‘clicks’.
   Or alternatively
   Back off the adjustment 5 ‘clicks’ and then apply the brakes 10 times. The in-built automatic slack adjuster will activate and set the correct air gap.
10. Ensure that the sealing cap (370) is replaced over the adjustment screw to prevent water ingress.
11. The allowable wear on the dowel pin is 2mm, measured in any direction. Therefore a minimum diameter of the dowel when measured is 8mm (original dowel diameter - 10mm)
    The allowable wear of the brake pad hole is 3mm, measured in any direction. Therefore a maximum diameter of the hole in the brake pad when measured is 14mm (original diameter - 11mm)

10 Point BPW And Knorr Bremse Disc Brake Check List

1. Check the wear of guide pin bushes (2mm maximum movement on both guide pins for SB and 1.8 mm maximum movement for **TSB**).
2. Check the sliding function - can the caliper be moved in and out with only two fingers.
3. Check the wear parts - rotate the pads every 6 months if possible to even out pad wear.
4. Check the rubber tappet boots. On **SB** adjust the tappets until they extend slightly out of caliper and check. On **TSB** remove dust cover (bayonet ring) with c-spanner and carefully pull tappet out of caliper.
5. Check the auto slack adjuster on **SB**. Tighten up the brakes then back off 5 clicks. Put 10mm ring spanner on adjuster adapter and apply and release brakes - spanner should rotate clockwise only.
6. Brake adjustment for both the **SB** and **TSB**. Tighten the adjuster until the disc drags then back off the adjuster for 2 'clicks'. Or **alternatively** tighten the adjuster until the disc drags and then back off the adjuster for 5 'clicks'. Now apply and release the brakes ten times - the built in automatic slack adjuster will automatically create the correct brake gap. The correct air gap is 0.7 to 1.3 mm between pad and rotor.
7. Check maxi brake springs. Remove the inspection bung on rear of booster and ensure that the caging bolt boss is visible and central. An off centre caging bolt boss may indicate a broken maxi brake spring.
8. Check the vent plugs in boosters - the bottom vent plugs should be re-moved - all the other vent plugs should be present. The rear inspection bung should also be present and fitted correctly.
9. Check the spring brake anti-compound valve for internal leaks. Remove the blue / service line at the bulkhead. No pressure should be present in line. Check the boosters for internal leaks with soapy water test.
10. Check the pressure lead between truck and trailer. The maximum allowable pressure lead is 0.2 bar between truck and trailer - see pages 28 and 36 of this **Operator's Manual.**

Background

Due to industry demand to lower tare weight and the increasing prevalence of P.B.S. Vehicles **BPW Transpec** is proud to introduce lightweight alloy hubs for the **BPW** axles.

ECO Plus 3 axles. The lightweight alloy hubs are identified by the word 'LIGHT' in the alloy hub cap.

Dismantling the roller bearings

1

1. Attach a thermocouple to the outside of the hub - the hub must never reach a temperature of more than 100° Celsius (3)
2. Place the hub on a soft wood base to prevent damage to the hub - (7)
3. Make a sheet metal ring (2) and insert into the hub to protect the circlip area from weld splatter.
4. Weld a bead completely around the inside of the bearing cup (4) using a shielded arc welding machine.
5. As the weld cools it will cause the bearing cup to shrink so that it can be easily removed without damaging the alloy hub.

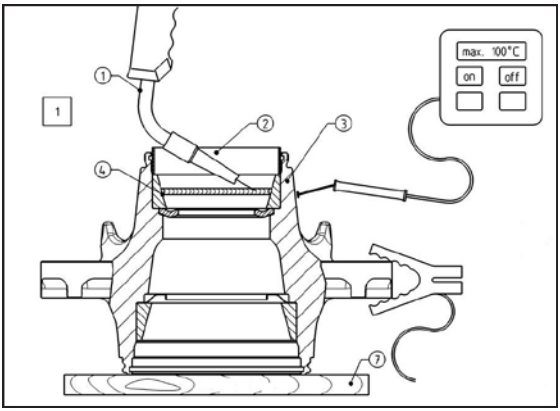

2

Dismantling the roller bearings

1. Repeat the above procedures for the inner bearing cup.
2. Once again protect the circlip area from weld splatter with a sheet metal ring (2).
3. Allow both bearings to cool to room temperature.

Recommended welding settings: -

260A 36V and 1.0mm wire

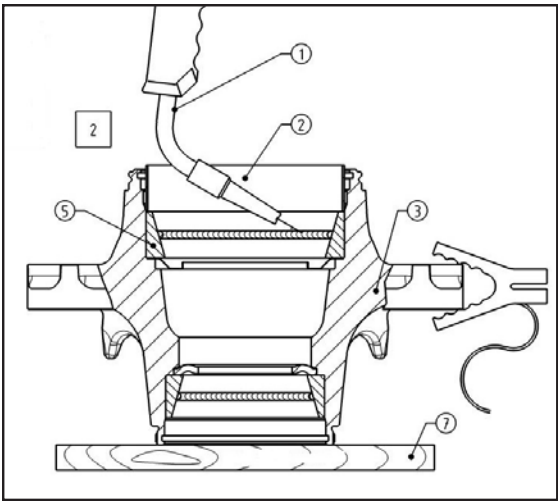

BPW Alloy Hubs - Service Procedures

Dismantling the roller bearings

3

1. Place the hub face down in an old brake drum to prevent damage to the hub flange. The brake drum should be placed on top of a soft wood base.
2. Once the bearings have cooled use a mandrel (6) to drive the old bearing cup out of the hub.
3. Do not damage the bearing seats.

4

1. Flip the hub over and repeat the process for the inner bearing cup.
2. Clean and inspect both bearing seats.
3. Damaged hubs must be replaced.

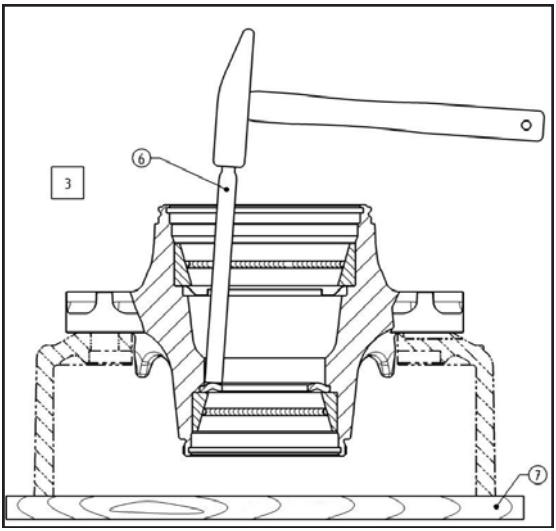

Assembly of the roller bearings

1. Using an oven heat the hub evenly to 80° Celsius.
2. Carefully press in the new bearing cups.
3. Inspect the hub for any damage.

Other alloy hub components.

1. The wheel studs, circlips and seals can be dismantled / assembled without having to heat up the hub.
2. The bearing setting is done exactly as per the standard hub. Please consult the **Operator's Manual** for bearing setting procedures.

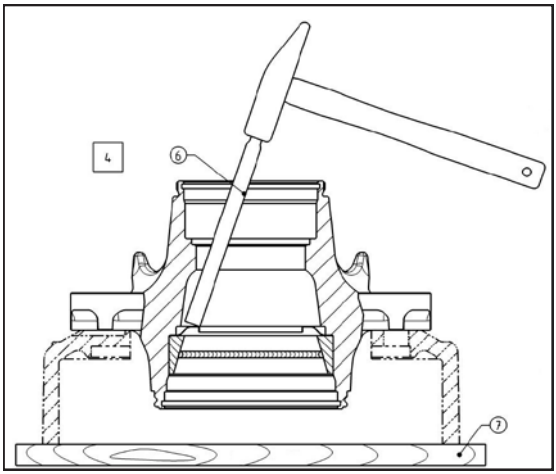

Please refer to page 16 for Service and Bearing Setting Instructions.

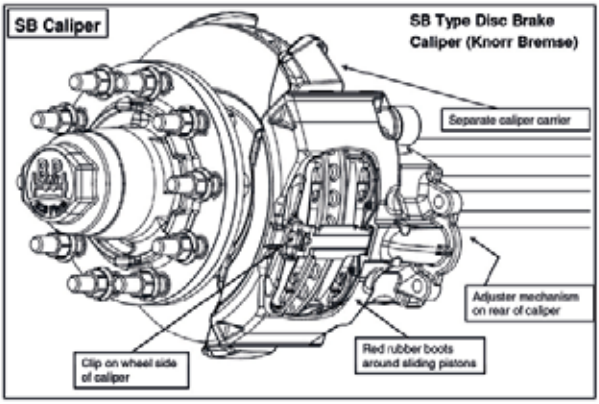
SB Caliper
SB Type Disc Brake Caliper (Knorr Bremse)
Separate caliper carrier
Adjuster mechanism on rear of caliper
Red rubber boots around sliding pistons
Clip on wheel side of caliper

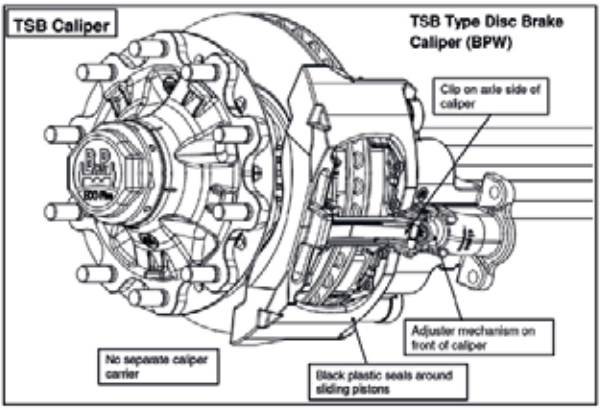
TSB Caliper
TSB Type Disc Brake Caliper (BPW)
Clip on axle side of caliper
Adjuster mechanism on front of caliper
No separate caliper carrier
Black plastic seals around sliding pistons

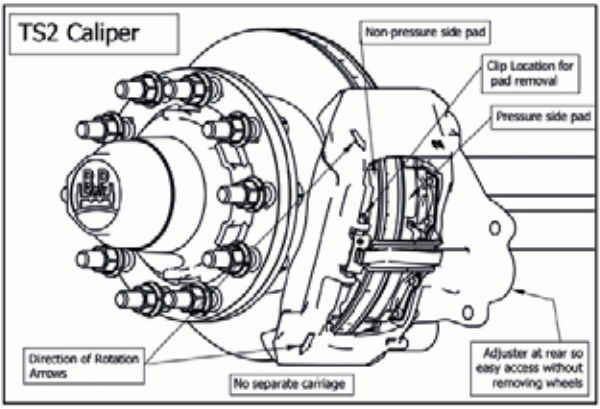
TS2 Caliper
Non-pressure side pad
Clip Location for pad removal
Pressure side pad
Direction of Rotation Arrows
No separate carriage
Adjuster at rear so easy access without removing wheels

TRANSPEC
ENGINEERED TO LAST

VICTORIA (Head Office)
1 - 11 Cherry Lane, North Laverton VIC 3026
Phone (03) 9267 2444 Fax (03) 9369 4826

NEW SOUTH WALES
10 Squill Place, Arndell Park, NSW 2148
Phone (02) 8811 7000 Fax (02) 8811 7050

QUEENSLAND
Cnr Archerfield Road & Bernoulli Street, Darra QLD 4076
Phone (07) 3217 0877 Fax (07) 3217 0230

WESTERN AUSTRALIA
1021 Abernethy Road, High Wycombe WA 6057
Phone (08) 9454 4000 Fax (08) 9454 4111

info@bpwtranspec.com.au
bpwtranspec.com.au

1300 651 652

The information and advice contained in this brochure including prices and specifications are current and correct as at **1st June 2019** but may be subject to change. **BPW Transpec** shall not be liable for any changes that occur after that date. It is your responsibility to contact your **BPW Transpec** branch or representative to ensure that all information and advice is up to date before placing an order.

BPW Operator's Manual 10/2020