RINGFEDER

RINGFEDER® Trailer couplings

RF50 AM AUS

06/2021 - Id. -Nr. 10090632a

EN The couplings in this instruction are certified according to UNECE R55. They are exclusively intended to be used together with drawbar eyes according to standard DIN 74054 or ISO 8755 regarding Ø40mm coupling bolt and DIN 74053 or ISO 1102 regarding Ø50mm coupling bolt respectively. Other areas of use than interconnection of vehicles according to UNECE R55 or ISO 18868 require a consent from the manufacturer. When replacing a used coupling, all the parts included in the new coupling delivery shall be replaced. The installation shall be done by a professional and in accordance with this instruction as well as with the requirements in appendix 7 in UNECE R55.

50 mm	E... UNECE 55 R		D (kN)	Dc (kN)	S (kN)	V (kN)	e1 x e2 (mm)
RF50 AM AUS	C50-X	E11 55 R-01-10486	320	135/135/170	1000/2000/1000	75/63/60	160 x 100

I

e1 x e2 (mm)	Ø d2 (mm)		ISO 7089	ISO 7042	Nm (±5%)	mm
160 x 100	21	M20 (≥ 8.8)	≥ 200 HV	≥ 8	390	30

II

	Nm	mm
M 45 x 3	1500-2000	70

Installation

Function check

Pinch point!

Open/unlocked

Closed/locked

Visual check

Wrench size

Tightening torque

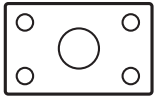

Hole pattern

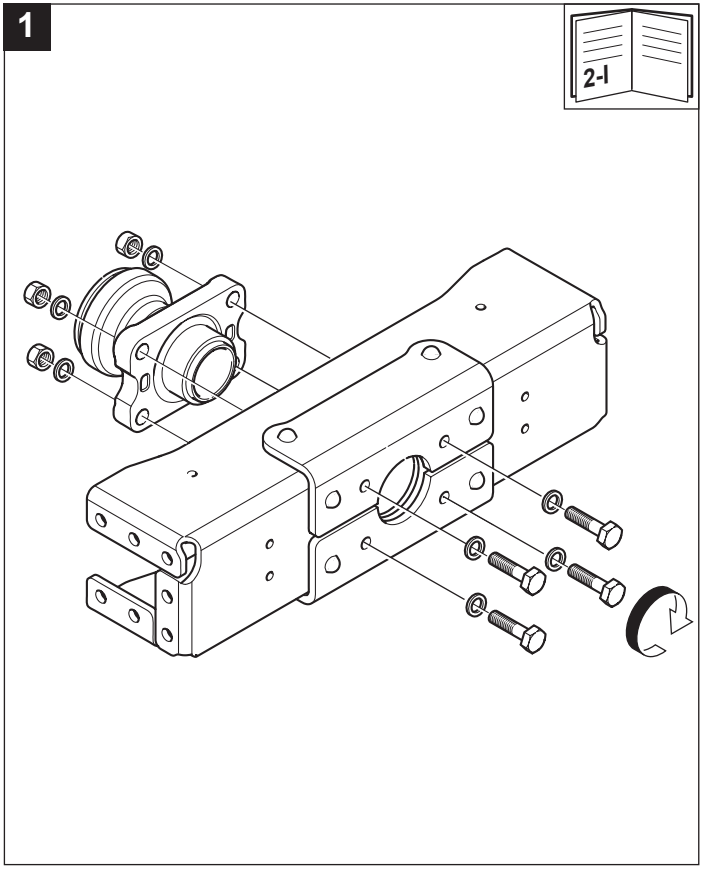
1
2-I

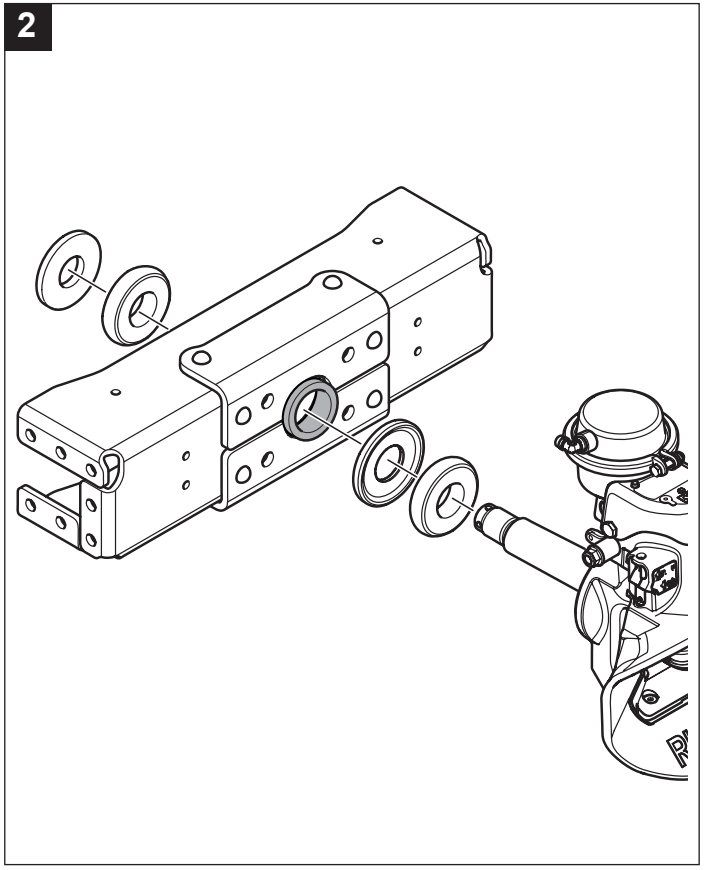
2

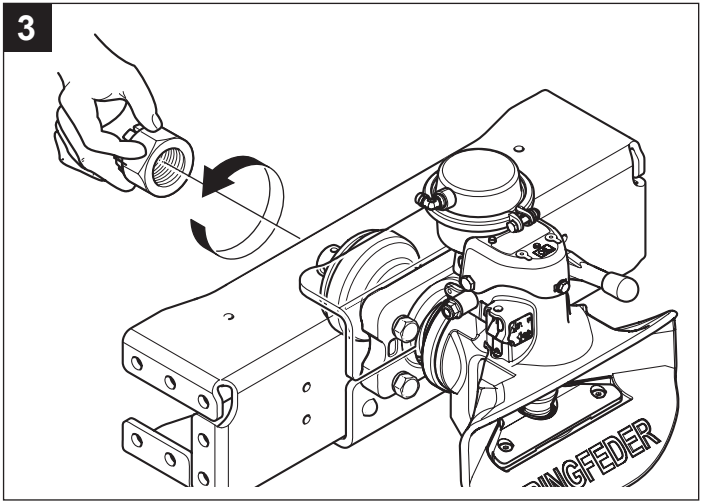
3
RINGFEDER

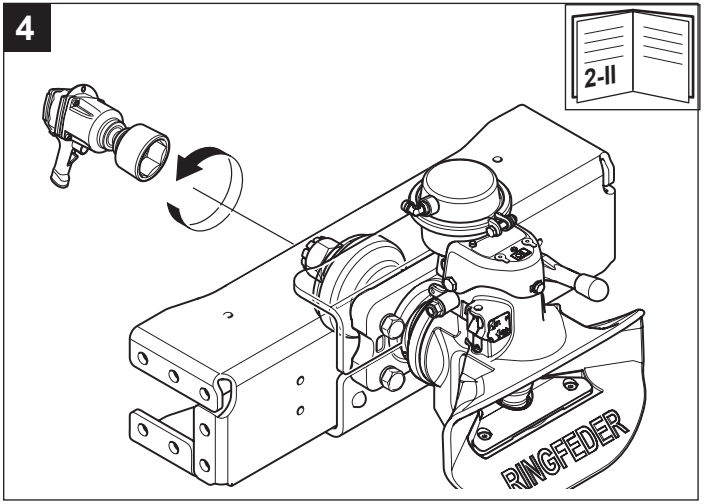
4
2-II
RINGFEDER

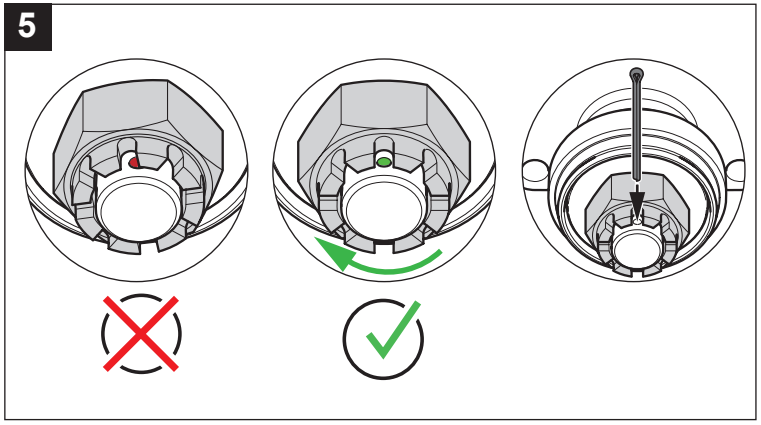
5

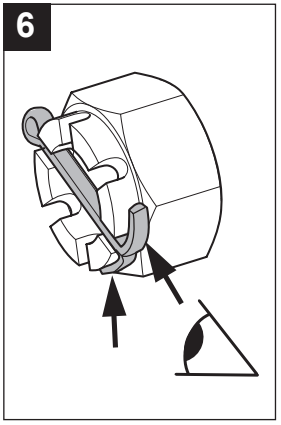
6

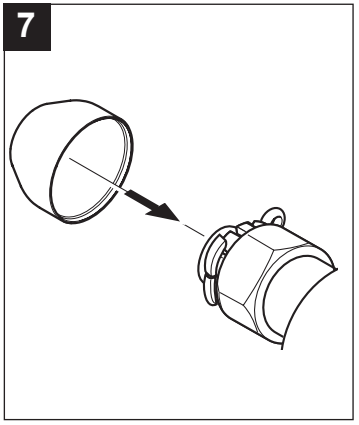
7

8

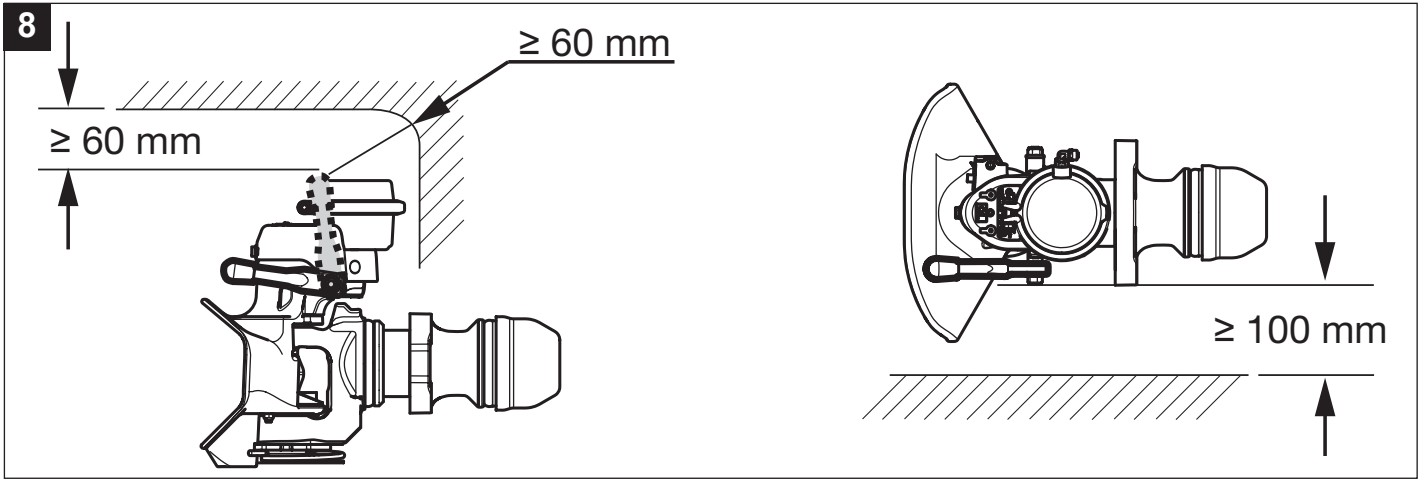

10080452

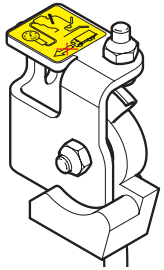

10080454

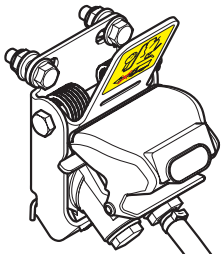

10080455

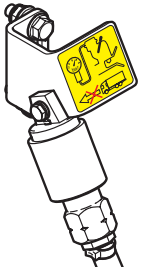

10090662

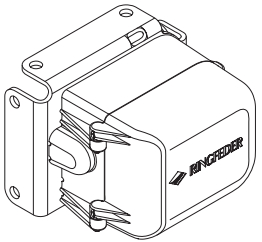

1

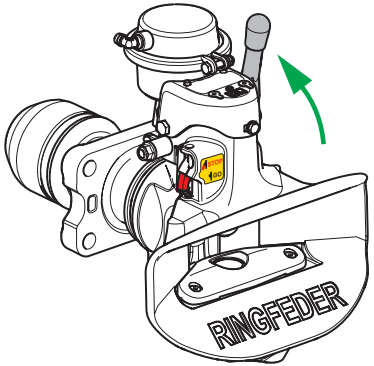

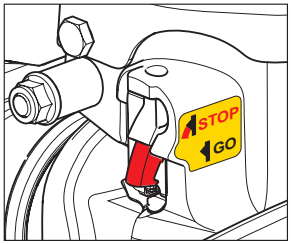

2

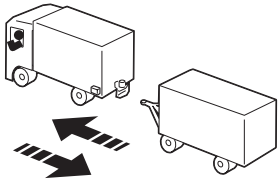

3

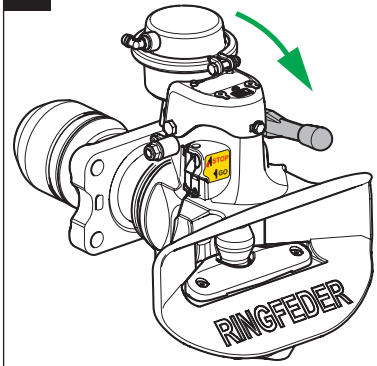

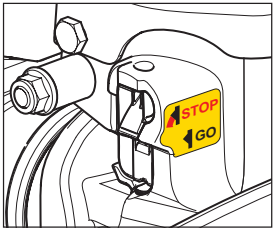

Produced in a certified company

VBG GROUP TRUCK EQUIPMENT GMBH · Girmesgath 5 · D-47803 Krefeld
www.ringfeder-rf.com

Member of VBG Group